All images in this brochure are for reference only, and the actual delivered products shall prevail. Our company continuously improves its products; in case of any changes to the above information, we reserve the right to make such changes without prior notice.

Scan to Explore More About Taikan Machine

TAIKAN INTELLIGENT EQUIPMENT (SHENZHEN) CO., LTD.
HONG KONG TAIQUN MACHINERY EQUIPMENT CO., LIMITED

Tel.: +86-755-2996 5778
E-mail: overseas-marketing@szccm.com
Website: www.taikanmachine.com
Headquarters Address: No. 154, Nanpu Road, Xinqiao Street, Bao'an District, Shenzhen City, Guangdong Province. China
Hong Kong Address: Office No. 504 on 5th Floor of Tower 2 of Silvercord, No. 30 Canton Road KL

V20250319

Taikan
Stock Code: 300083



HIGH SPEED | HIGH PRECISION | HIGH EFFICIENCY

HIGH-PRECISION CNC HORIZONTAL TURN-MILL COMPOUND MACHINE

HIGH-END INTELLIGENT EQUIPMENT INTEGRATED SOLUTION SERVICE PROVIDER

About Us

Company Profile

Guangdong Create Century Intelligent Equipment Group Co., Ltd.(Create Century, Stock Code: 300083) . The company is a national high-tech enterprise of intelligent equipment, integrating R&D, production, sales and service. With over 20 years of industry experience, it can provide customers with high-quality equipment and intelligent solution service. It is recognized as one of the most technologically advanced companies in the industry, offering one of the most comprehensive product portfolios among its domestic peers.

NO.183
Shenzhen Top 500 Enterprises

NO.175
Top 500
Manufacturing Companies in
Guangdong Province

Top 100
Shenzhen Bao'an District
- Top 100 Taxpayers
- Top 100 Value Added
- Top 100 Output Value
- Top 100 Innovation Enterprises



About Us

Advantages

5
Manufacturing Bases

785,000m^2
Factory area

3000+
Employees



Shenzhen Headquarters
Group Headquarters | Global Marketing Center | Technology R&D Center



Huzhou Manufacturing Headquarters
Group Manufacturing Headquarters | East China High-End CNC Machine Manufacturing Industrialization Production Base



Dongguan Manufacturing Base



Suzhou East China Headquarters



Yibin Manufacturing Base



Vietnam Manufacturing Base

Main Products

Vertical Machining Center	Tapping Machining Center	Profile Machining Center
Horizontal Machining Center	Five-axis Machining Center	Gantry Machining Center
Boring Machining Center	High-speed Machining Center	CNC Lathe
Vertical Lathe	Swiss-type Lathe	Turn-Mill

Technological Advantages

3 Technology Research Institute
- South China Research Institute —— Shenzhen
- East China Research Institute —— Suzhou
- Northwest Research Institute —— Xi'an

4 Strategic Cooperation Organization
- Shenzhen academician (expert) workstation
- Intelligent precision machining key technology engineering laboratory
- Guangdong engineering technology research center
- Shenzhen enterprise technology center

792+ Core Patents
- Invention Patents——109
- Utility Model Patents——529
- Design Patents——106
- Total Trademarks Obtained——154

Global Support Network



Create Century's sales and service network extends to more than 50 countries and regions worldwide, including Vietnam, Malaysia, South Korea, Saudi Arabia, Mexico, Argentina, Brazil, Peru, Germany, France, Turkey, and Spain. Our high-end intelligent equipment and integrated smart manufacturing solutions, proudly made in China, are gaining global recognition.

In the future, Create Century Group will establish marketing centers and production bases in Vietnam, Malaysia, Turkey and other places.

50+
Sold to more than 50 countries

200+
Sales & Service Centers

700+
After-sales service staff

1 Year free warranty
Lifetime Maintenance
300+ sales and service staff

VIP On-Site service
24 hours service
The "1812" standard

Comprehensive and professional machine operation
Maintenance training

Adequate spare parts
Up to 10 minutes response time for repairs
Low cost out-of-warranty maintenance

Complete acceptance and testing to ensure product quality

车铣复合系列
TURN-MILL COMPOUND SERIES

优良的设计 EXCELLENT DESIGN

强大的性能 POWERFUL PERFORMANCE

系列机型 Series Models

HL-46SDY　HL-52SDY

高刚性整体设计 Highly rigid overall design

搭配了高精密的三片式放射型离合器，确保其定位精度、重复定位精度，搭配伺服马达驱动刀盘旋转，进行双向或是任意就近选刀。

Equipped with high-precision 3-piece radial clutch to ensure positioning accuracy and repeat positioning accuracy. Driven by servo motor to rotate the tool turret for bidirectional or arbitrary nearest tool selection.

标准配置 Standard Features

新代系统	Syntec System
15/17.8 Kw主轴电主轴	15/17.8 Kw spindle motorized spindle
主轴带Y轴刀塔12工位 BMT45	Spindle with Y-axis 12-station tool turret BMT45
副主轴不带Y 动力刀塔12工位 BMT45	Sub-spindle without Y-axis 12-station live tool turret BMT45
3H-206A5液压卡盘	3H-206A5 hydraulic chuck
链板式排屑器	Chain type chip conveyor
自动润滑装置	Automatic lubrication device

选项(部分列举) Options (partial)

A2-5机械主主轴	A2-5 mechanical main spindle
液压弹夹	Hydraulic collet
油雾收集器	Oil mist collector
油水分离器	Oil-water separator
高压泵	High-pressure pump



性 能 Performance

最大加工直径 Max. machining diameter Φ570mm
最大车削长度 Max. turning length 130mm
主轴端型式 Spindle nose type A2-5
卡盘型号 Chuck size 6"
最高转速 Max. speed 4000rpm
铣削轴电机 Milling axis motor 2.7KW
钻孔能力 Drilling capacity Φ16×1.5mm
最高转速 Max. speed 6000rpm
主轴通孔尺寸 Spindle through-hole Φ57mm
重量 Weight 5000KG

机械结构
MECHANICAL STRUCTURE

L-46SDY采用全闭环控制，双主轴、双刀架、光栅尺、双通设计，可轻松搭载多种动力头和车削工具。

L-46SDY adopts full closed-loop control, with dual spindle, dual tool holder,grating ruler, and dual channel design, which can easily carry various power heads and turning tools.

同步伺服电主轴 IN-LINE MEASURING DEVICE FOR WORKPIECES

主轴与床身结合面采用配对刮研工艺，保证接触刚度更强，采用大跨距对称结构，热漂移小，精度稳定。

The joint surface between the spindle and the bed adopts a paired scraping process to ensure stronger contact stiffness. It adopts a large span symmetrical structure, with small thermal drift and stable accuracy.

直联式正交刀架 DIRECT CONNECTED ORTHOGONAL TOOL HOLDER

12工位BMT45伺服刀架；
Y2轴行程100mm；
采用独特的蜂窝式筋形结构。

12 station BMT45 servo tool holder;
Y2 axis stroke 100mm;
Adopting a unique honeycomb reinforcement structure.

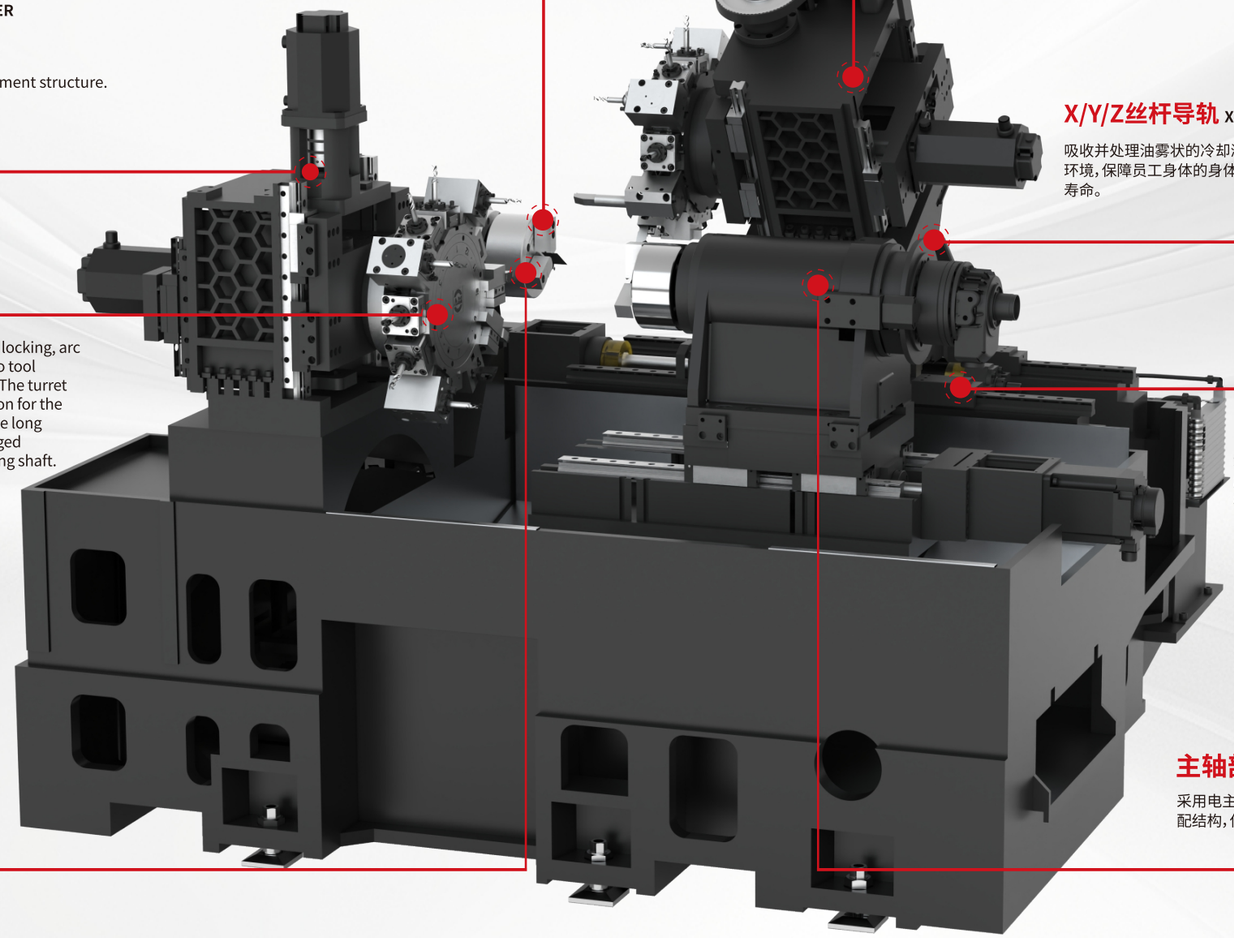

同步带正交Y刀架 SYNCHRONOUS BELT ORTHOGONAL Y-TOOLHOLDER

采用箱中箱四导轨支撑结构，刚性更强；
12工位BMT45伺服刀架。

Adopting a box in box four guide rail support structure, with stronger rigidity;
12 station BMT45 servo tool holder.

X/Y/Z丝杆导轨 X/Y/Z SCREW GUIDE RAIL

吸收并处理油雾状的冷却液和油类，保持良好的车间环境，保障员工身体的身体健康，延长电力系统的使用寿命。

Adopting imported and stretched screw rods from abroad to eliminate reverse clearance, resulting in more stable accuracy. The guide rail adopts roller guide rail, which has stronger rigidity.

刀塔 TURRET

刀塔采用液压锁紧，弧齿定位，伺服换刀的设计原理
刀塔采用铣削轴采用油气润滑，消除刀塔铣削轴长时间工作引起的热身长 。

The turret adopts hydraulic locking, arc tooth positioning, and servo tool changing design principles The turret adopts oil and gas lubrication for the milling shaft, eliminating the long warm-up caused by prolonged operation of the turret milling shaft.

床身/滑鞍 BAR CONVEYORS

均采用高密度铸铁材料，整体浇筑一次成型，其中滑鞍为三角结构，使整个结构刚性更强，动态性能更加稳定。

All are made of high-density cast iron material, which is poured and formed in one go. The sliding saddle is a triangular structure, making the entire structure more rigid and dynamic performance more stable.

卡盘 CHUCK

卡盘选择6寸液压三爪中空卡盘，并具备卡盘中心出水功能，提高了操作的便利性。

The chuck is selected as a 6-inch hydraulic three jaw hollow chuck, which has the unction of discharging water from the center of the chuck, improving the convenience of operation.

主轴部件二 SPINDLE COMPONENT II

采用电主轴，结构更加紧凑，其中箱体为一体式装配结构，保证刚性更强。

Adopting an electric spindle, the structure is more compact, with the box body being an integrated assembly structure to ensure stronger rigidity.

HL-46SDY机器外观尺寸图
HL-46SDY Machine exterior dimensions diagram

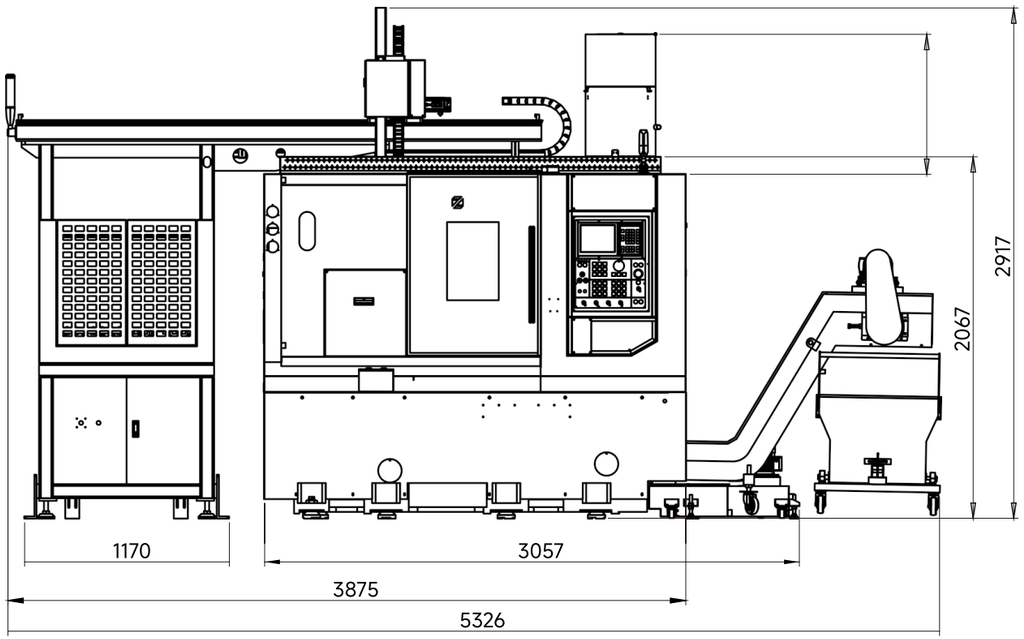

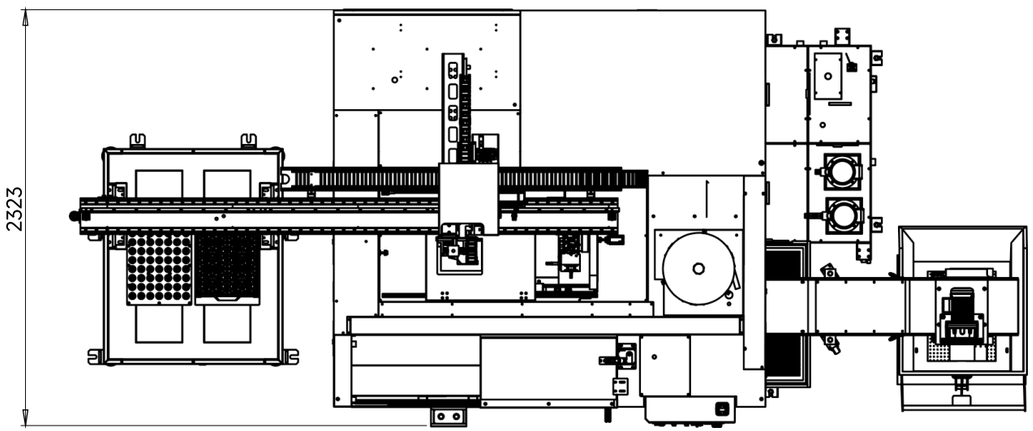

HL-46SDY双主轴双刀塔加工干涉图
HL-46SDY Interference diagram for dual spindle dual turret machining

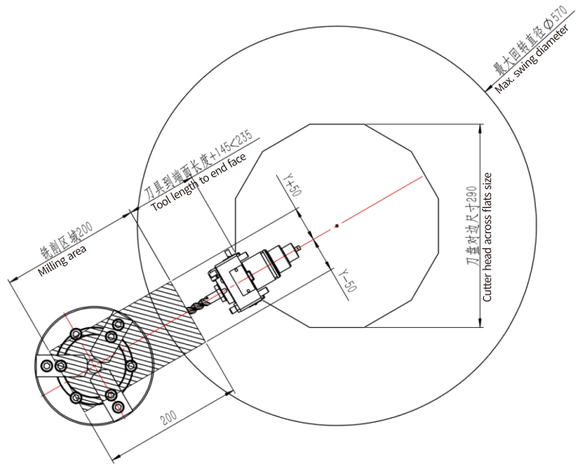

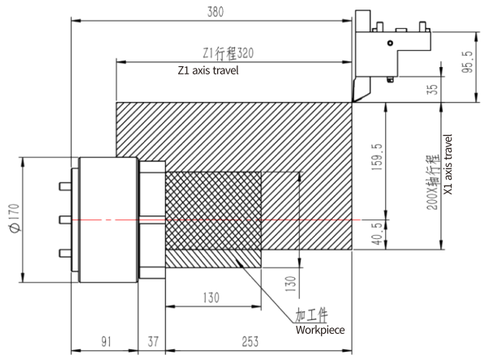

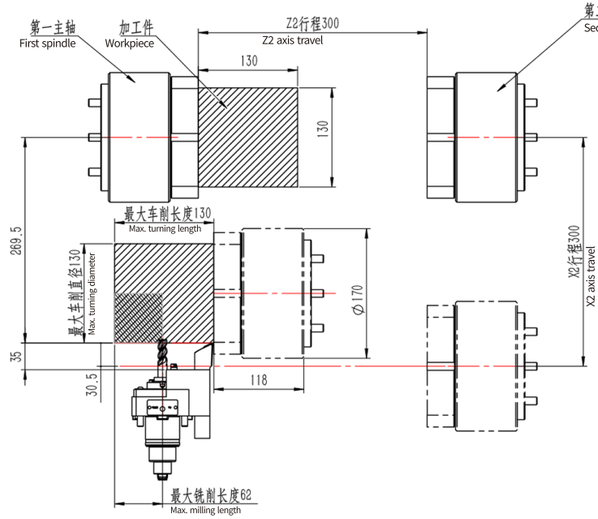

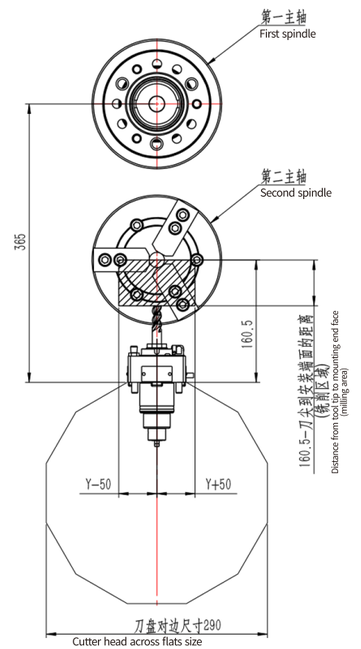

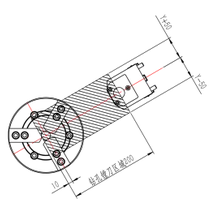

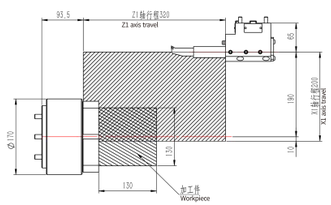

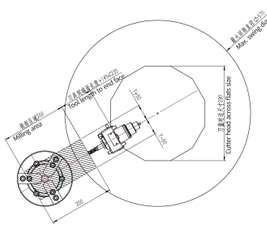

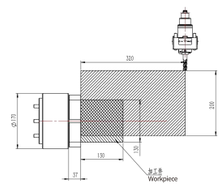

配置表 Configuration Table

项目 Item	HL-46SDY	HL-52SDY	品牌 Brand
控制系统 Control system	SYNTEC / FANUC	SYNTEC / FANUC	SYNTEC / FANUC
伺服电机 Servo motor	X/X1/Z/Z1	X/X1/Z/Z1	
刀塔电机 Turret motor	/		
刀塔旋转电机 Turr rotation motor	/		
刀塔单元 Turret unit	正交Y轴刀塔-BMT45/BMT45 Orthogonal Y-axis turret	正交Y轴刀塔-BMT45/BMT45 Orthogonal Y-axis turret	/
主驱动 Main drive	驱动功率，11千瓦 Drive power: 11 kW	驱动功率，11千瓦 Drive power: 11 kW	SYNTEC / FANUC
电主轴 Electric spindle	11 KW	11 KW	Taikan
滚珠丝杠 Ball screw	X/X1/Z/Z1 Φ32×10	X/X1/Z/Z1 Φ32×10	PMI/hiwin
直线导轨 Linear guide rail	X/X1/Z/Z1 35导轨 Guide rails	X/X1/Z/Z1 35导轨Guide rails	PMI/hiwin
丝杠轴承 Screw bearing	25TAC62C SU PN7C	25TAC62C SU PN7C	NSK
主轴卡盘 Spindle chuck	3H-206-A5	3H-208-A6	佳贺AUTOGRIP
副主轴卡盘 Auxiliary spindle chuck	3H-206-A5	3H-206-A5	
主轴油缸 Spindle oil cylinder	TK-B646	TH-852	
副轴油缸 Countershaft oil cylinder	TK-B646	TK-B646	
自动润滑装置 Automatic lubrication device	TZ2212+容积式分配器 Positive displacement distributor	TZ2212+容积式分配器 Positive displacement distributor	宝腾 BAOTN
冷却水泵 Cooling water pump	750W; 80L/min	750W; 80L/min	洛锐 Luikar
油冷机 Oil cooler	LCO-15FPT	LCO-15FPT	菱基 lingji
排屑器 Chip conveyor	Chain type chip conveyor	Chain type chip conveyor	智杰 Shutesmart

参数表 Parameter Table

项目 Item		单 位Unit	HL-46SDY	HL-52SDY
作业能力 Machining capacity	最大回转直径 Max. swing diameter	mm	Ø570	Ø570
	滑鞍上最大回转直径 Max. turning diameter on the saddle	mm	Ø320	Ø320
	最大车削直径 Max. turning diameter	mm	Ø130	Ø130
	最大车削长度 Max. turning length	mm	130	130
行程 Travel	X1、X2轴行程 X1 and X2 axis travel	mm	200/300	200/300
	Y1、Y2轴行程 Y1 and Y2 axis travel	mm	±50	±50
	Z1、Z2轴行程 Z1 and Z2 axis travel	mm	320/300	320/300
主轴 Spindle	卡盘尺寸 Chuck size	inch	6"	8"
	最高转速 Max. speed	rpm	6000	4500
	主轴端型式 Spindle end type	/	A2-5	A2-6
副主轴 Sub-spindle	卡盘尺寸 Chuck size	inch	6"	6"
	最高转速 Max. speed	rpm	6000	6000
	主轴端型式 Spindle end type	/	A2-5	A2-6
铣削主轴 Milling spindle	最高转速 Max. speed	rpm	4000	4500
	钻孔能力 Drill capacity	mm	Ø16X1.5	Ø16x1.5
	铣削主轴电机 Milling spindle motor	KW	2.7	2.3
	刀塔 Tool turret	/	BMT45	BMT45
进给速度 Feed speed	X-轴快进速度 X-axis feed speed	mm/min	18000	18000
	Z-轴快进速度 Z-axis feed speed	mm/min	18000	18000
	Y-轴快进速度 Y-axis feed speed	mm/min	10000	10000
电机 Electrical motor	主轴电机 Spindle motor	KW	>11	>11
	冷却泵电机 Cooling pump motor	KW	0.75	0.75
电/气源 Electricity/Gas	电源容量（连续定额） Power capacity (continuous rating)	KVA	64/44.75	64/44.75
	气源 Air source	L/min	0.5Mpa/100	0.5Mpa/100
冷却 Cooling	水箱容量 Water tank capacity	L	130	130
尺寸/重量 Size/weight	主轴中心到地面距离 Distance from spindle center to ground	mm	1070	1070
	机床高度 Machine height	mm	2060	2060
	占地面积（L×W） Machine footprint (L × W)	mm	2410×2210	2410×2210
	机床重量(约) Machine weight (approximately)	Kg	5000	5000

车铣复合系列
TURN-MILL COMPOUND SERIES

优良的设计 EXCELLENT DESIGN

强大的性能 POWERFUL PERFORMANCE

系列机型 Series Models

HL-25Y HL-35Y HL-45Y HL-45YP

高精度整体设计 Highly rigid overall design

移动速度快、噪声低、定位精度和重复定位精度高；本机床功能强，精度高，布局合理，造型美观，易于操作，维修方便。

High rapid traverse speed, low noise, high positioning accuracy and repeat positioning accuracy. This machine features strong functions, high precision, reasonable layout, attractive appearance, easy operation and convenient maintenance.

标准配置 Standard Features

FANUC 0i—TF PLUS (3B) 系统	FANUC 0i-TF PLUS (3B) Control System
12工位带Y轴动力刀塔	12-station power tool turret with Y-axis
8寸三爪中空液压卡盘	8" 3-jaw hollow hydraulic chuck
自动润滑系统	Automatic lubrication system
液压系统	Hydraulic system
水箱	Coolant tank
冷却系统	Cooling system

选项(部分列举) Options (partial)

自动侧排屑+积屑小车 (右排)	Automatic side chip conveyor with chip cart (right discharge)
伺服送料机	Servo bar feeder
液压尾架	Hydraulic tailstock
油缸行程检测开关	Cylinder stroke detection switch



性 能 Performance

最大加工直径 Max. machining diameter ϕ520mm
最大加工长度 Max. turning length 330mm
主轴端部形式 Spindle nose type A2-6
液压三爪卡盘 8-inch hydraulic 3-jaw chuck
主轴转速 Spindle speed 0-4000r/min
输出功率 Output power 11/15 (S1/S6)KW
把刀具容量 Tool capacity 12 tools
重量 Weight 3800KG

机械结构
MECHANICAL STRUCTURE

L-25Y/L-35Y/L-45Y 采用全封闭防护罩，拉门向左开，旋转操纵台位于右端固定防护罩上，操作方便。各伺服进给轴均采用高速静音滚珠丝杠，弹性联轴器直接连接，移动速度快、噪声低、定位精度和重复定位精度高；

L-25Y/L-35Y/L-45Y The equipment features a fully enclosed protective cover with a sliding door that opens to the left, and a rotary control panel fixed on the right end of the protective cover for convenient operation. All servo feed axes employ high-speed silent ball screws and are directly connected through flexible couplings, achieving fast movement speed, low noise, high positioning accuracy, and excellent repeatability.

同步伺服电主轴 IN-LINE MEASURING DEVICE FOR WORKPIECES

采用高扭矩电机设计，在铣削与车削时保障精度。

Adopts a high-torque motor design to ensure precision during milling and turning.

卡盘 CHUCK

卡盘选择中国台湾液压三爪中空卡盘，并具备卡盘中心出水功能，提高了操作的便利性.

The chuck is selected as a TAIWAN hydraulic three jaw hollow chuck, which has the unction of discharging water from the center of the chuck, improving the convenience of operation.

L-25Y ——6寸卡盘 6-inch chuck
L-35Y ——8寸卡盘 8-inch chuck
L-45Y ——10寸卡盘 10-inch chuck
L-35YP ——8寸卡盘 8-inch chuck
L-45YP ——10寸卡盘 10-inch chuck

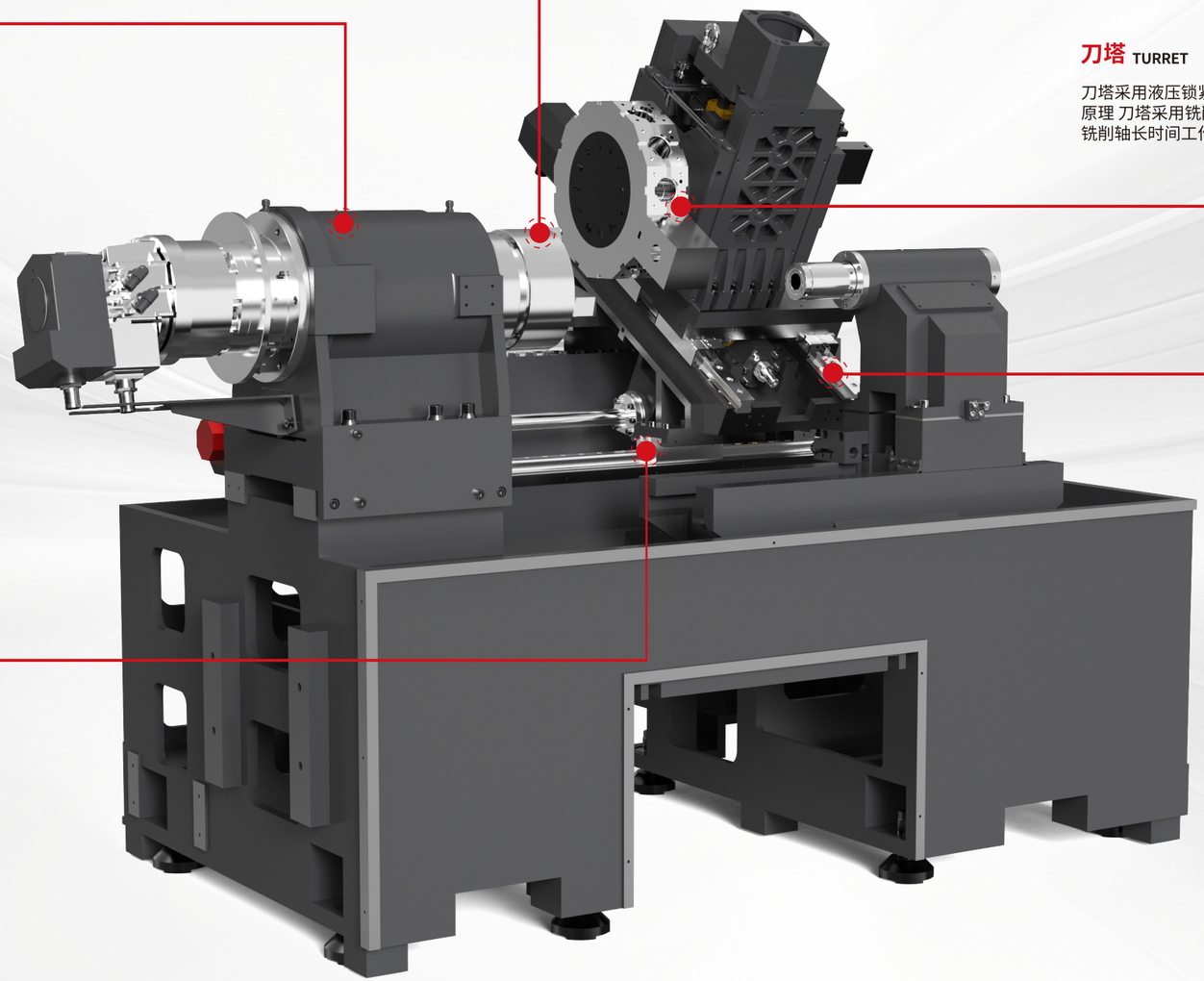

刀塔 TURRET

刀塔采用液压锁紧，弧齿定位，伺服换刀的设计原理 刀塔采用铣削轴采用油气润滑，消除刀塔铣削轴长时间工作引起的热身长。

The turret adopts hydraulic locking, arc tooth positioning, and servo tool changing design principles The turret adopts oil and gas lubrication for the milling shaft, eliminating the long warm-up caused by prolonged operation of the turret milling shaft.

X/Y/Z丝杆导轨 X/Y/Z SCREW GUIDE RAIL

采用进口丝杆线规丝杆P4级精度导轨C3级精度。

Utilizes imported lead screw linear scales. Equipped with P4-grade precision lead screws and guide rails. Achieves C3-grade precision.

床身/滑鞍 BAR CONVEYORS

均采用高密度铸铁材料，整体浇筑一次成型，高低轨30度床身设计，使整个结构刚性更强，动态性能更加稳定。

The machine employs high-density cast iron material, cast in a single piece for seamless integrity. The 30-degree high-low rail bed design enhances overall structural rigidity and ensures superior dynamic stability.

机器外观尺寸图
Machine exterior dimensions diagram

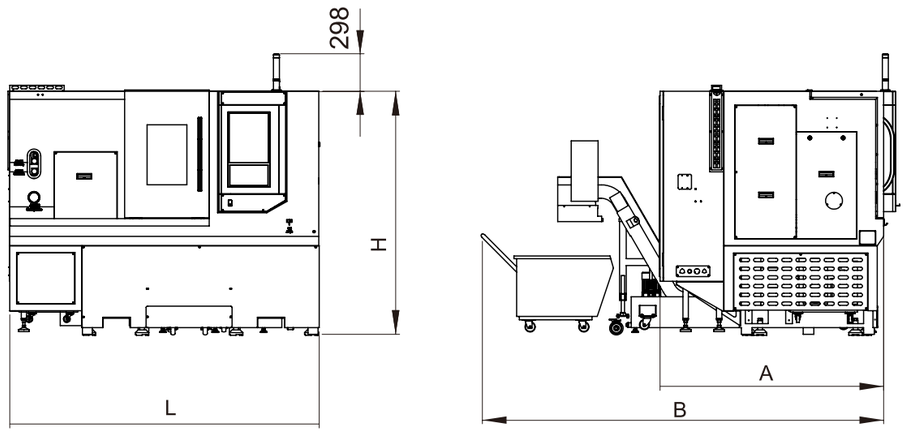

标准尺寸 Standard dimensions

设备型号Equipment model	L	H	A	B
HL-25Y	2400	1980	1920	2950
HL-35Y	2400	1980	1920	2950
HL-45Y	2400	1980	1920	2950

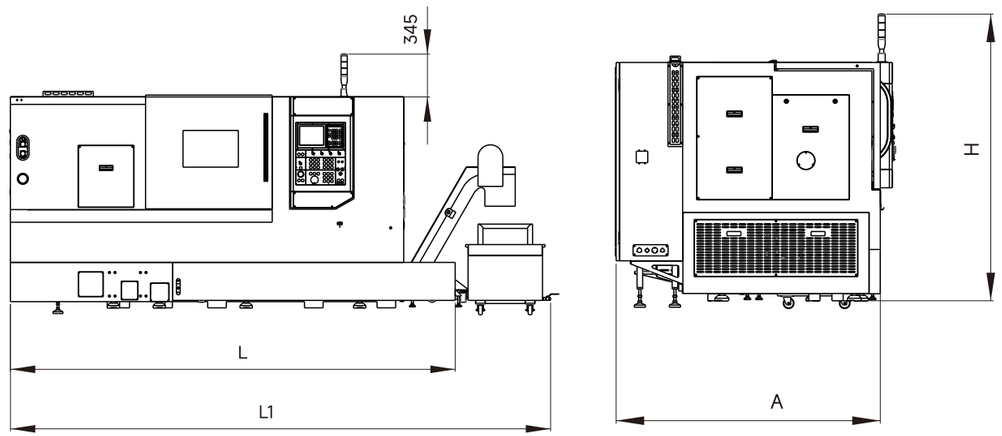

标准尺寸 Standard dimensions

设备型号Equipment model	L	L1	H	A
HL-45YP	3585	4500	2360	1880

加工能力图
Processing Capacity Chart

HL-35Y

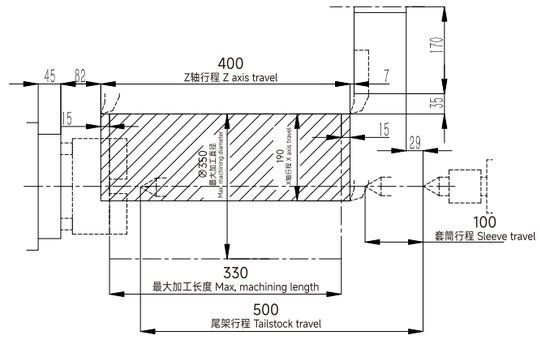

HL-45YP

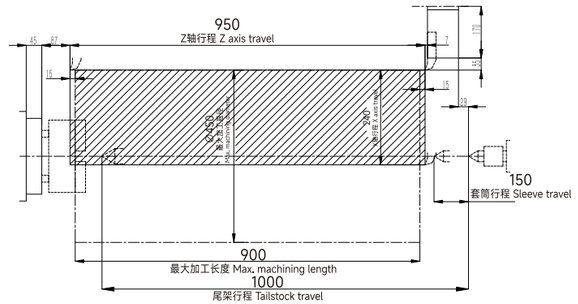

刀具干涉图
Tool interference diagram

HL-35Y

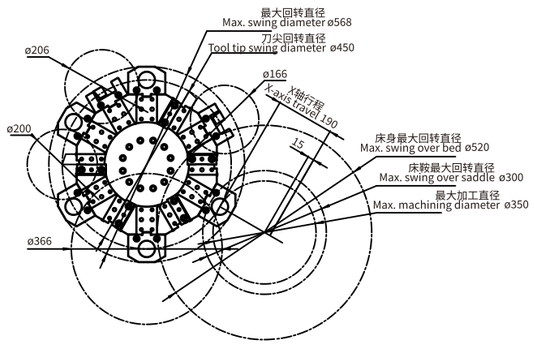

HL-45YP

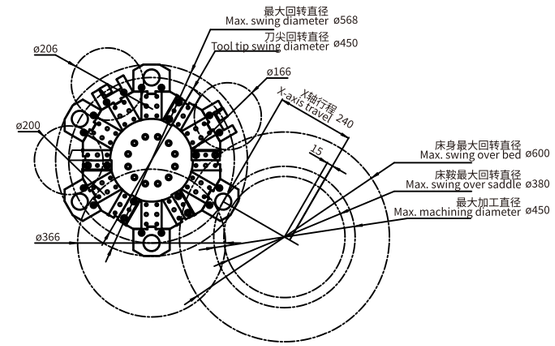

配置表 Configuration Table

项目 Item	HL-25Y	HL-35Y	HL-45Y	HL-45YP
主轴头A2-5 Spindle head A2-5	√	★	★	√
主轴头A2-6 Spindle head A2-6	★	√	√	★
主轴头A2-8 Spindle head A2-8	×	★	★	★
三色灯 Tricolor light	√	√	√	√
液压系统 Hydraulic system	√	√	√	√
照明灯 Floodlight	√	√	√	√
冷却系统 Cooling system	√	√	√	√
安全门锁 Safety door lock	★	★	★	★
对刀仪 Tool Setter	★	★	★	★
接料装置 Material Feeding Device	★	★	★	★
自动润滑系统 Automatic Lubrication System	√	√	√	√
6寸中空卡盘油缸 6-inch hollow chuck oil cylinder	√	★	★	√
8寸中空卡盘油缸 8-inch hollow chuck oil cylinder	★	√	√	★
油雾收集器 Oil mist collector	★	★	★	★
油水分离器 water separator	★	★	★	★
动力刀塔 Power turret	√	√	√	√
送料机 feeder	★	★	★	★

√ 标准配置 ★ 可选配置 × 不可选　　√ Standard configuration ★ Optional configuration × Not available

加工案例 Processing Cases

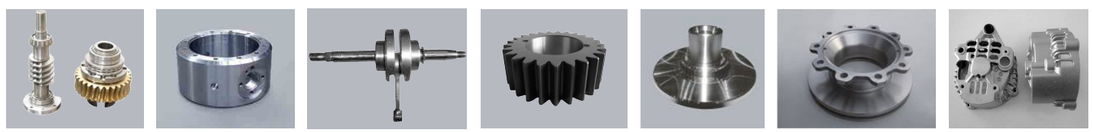

参数表 Parameter Table

项目 Item		HL-25Y	HL-35Y	HL-45Y	HL-45YP
加工范围 Machining range	床身上最大回转直径(mm) Max. swing diameter on the bed (mm)	Ø520	Ø520	Ø600	Ø600
	最大加工直径(轴/盘)(mm) Max. machining diameter (shaft/disc) (mm)	Ø300/Ø350	Ø300/Ø350	Ø380/Ø450	Ø380/Ø450
	最大加工长度(mm) Max. machining length (mm)	330	300	240	900
	最大棒料直径(mm) Max. bar diameter (mm)	Ø45	Ø50	Ø52	Ø75
行程 Travel	X轴行程(mm) X-axis travel (mm)	200	200	240	240
	Y轴行程(mm) Y-axis travel (mm)	100(±50)	100(±50)	/	100(±50)
	Z轴行程(mm) Z-axis travel (mm)	400	400	430	950
主轴 Spindle	输出功率(kw) Output power (kW)	7.5/11	11/16.5	15/22.5	15/22.5
	主轴头形式 Spindle head form	A2-5	A2-6	A2-8	A2-8
	主轴最高转速(rpm) Max. spindle speed (rpm)	5300	4000	4000	2500
	主轴通孔直径(mm) Spindle through-hole diameter (mm)	Ø57	Ø63	Ø103	Ø87
刀架 Tool turret	刀塔形式及刀具容量 Turret type and tool capacity	Power BMT45/12	Power BMT45 (Including Y-axis)/12	Power BMT55/12	Power BMT55/12
	外圆刀具尺寸(mm) External tool dimensions (mm)	/	25×25	25×25	25×25
	最大镗刀直径(mm) Max. boring tool diameter	Ø32	Ø32	Ø40	Ø32
快移速度 Rapid traverse speed	X/Z轴(mm/min) X/Z-axis(mm/min)	30000	30000	30000	30000
进给速度 Feed rate	进给速度(mm/min) Feed speed (mm/min)	1-8000	1-8000	1-8000	1-8000
尾架 Tailstock	尾架形式及锥孔形式 Tailstock type and taper hole type	Morse 4#	Morse 4#	Hydraulic sleeve Morse 4#	Morse 5#
	尾架套筒行程(mm) Tailstock sleeve travel (mm)	80	70/100	70/100	100/150
	最大移动量(mm) Max. travel distance (mm)	/	X/200 Z400	X240/Z/430	/
控制系统 Control system	Nc形式 NC	FANUC 0I TF(5)	FANUC 0I TF(5)	FANUC 0I TF(5)	FANUC 0I TF(3B)
排屑形式 Chip removal form		/	Automatic rear discharge	Automatic rear discharge	Automatic rear discharge

本画册内所有图片仅供参考，以实际交付为准；本公司产品不断改进，上述资料若有变更，恕不另行通知。
All images in this catalog are for reference only.Actual delivery may vary. Our company continuously improves its products, and in the event of any changes to the above information, no separate notice will be given.

车铣复合系列
TURN-MILL COMPOUND SERIES

优良的设计 EXCELLENT DESIGN

强大的性能 POWERFUL PERFORMANCE

系列机型 Series Models

HL-25M HL-35M HL-45M HL-45MP

高刚性整体设计 Highly rigid overall design

采用全封闭防护罩，拉门向左开，旋转操纵台位于右端固定防护罩上，操作方便。机床功能强，精度高，布局合理，造型美观，易于操作，维修方便。

It adopts a fully enclosed protective cover with the sliding door opening to the left. The rotating operating console is mounted on the right fixed protective cover for convenient operation. The machine features strong functions, high precision, reasonable layout, attractive appearance, easy operation and convenient maintenance.

标准配置 Standard Features

FANUC 0i—TF PLUS (3B) 系统	FANUC 0i-TF PLUS (3B) Control System
液压尾架	Hydraulic tailstock
12工位动力刀塔	12-station power tool turret
10寸三爪中空液压卡盘	10" 3-jaw hollow hydraulic chuck
自动润滑系统	Automatic lubrication system
液压系统	Hydraulic system
冷却系统	Cooling system

选项(部分列举) Options(partial)

电主轴A2-8	Motorized spindle A2-8
10寸中实卡盘/中实油缸	10" solid chuck / solid cylinder
液压中心架	Hydraulic steady rest
对刀仪	Tool setter

性 能 Performance

床身上最大回转直径 Max. swing over bed φ600mm
最大加工长度 Max. machining length 900mm
主轴端部形式 Spindle nose type A2-8
液压三爪卡盘10 寸 hydraulic 3-jaw chuck 10 inch
主轴转速 Spindle speed 0-2500r/min
输出功率 Output power 15/18.5 (S1/S6)KW
刀具容量12把 Tool capacity 12 tools
机床净重 (约重) Net weight of machine (approx.) 4500KG



机械结构
MECHANICAL STRUCTURE

L-45M/L-L-45MP采用全封闭防护罩，拉门向左开，旋转操纵台位于右端固定防护罩上，操作方便。各伺服进给轴均采用高速静音滚珠丝杠，弹性联轴器直接连接，移动速度快、噪声低、定位精度和重复定位精度高；

L-45M/L-45MP features a fully enclosed protective cover with a sliding door that opens to the left. The rotary control console is mounted on the fixed protective cover at the right end, ensuring convenient operation. All servo-driven feed axes utilize high-speed silent ball screws and are directly connected via flexible couplings. This design delivers rapid movement speed, low noise, as well as exceptional positioning accuracy and repeatability.

同步伺服电主轴 Synchronous servo motorized spindle

采用高扭矩电机设计，在铣削与车削时保障精度。

The system incorporates a high-torque motor design, ensuring precision and high-speed performance during both milling and turning operations.

刀塔 TURRET

刀塔采用液压锁紧，弧齿定位，伺服换刀的设计原理 刀塔采用铣削轴采用油气润滑，消除刀塔铣削轴长时间工作引起的热身长 。

The turret adopts hydraulic locking, arc tooth positioning, and servo tool changing design principles The turret adopts oil and gas lubrication for the milling shaft, eliminating the long warm-up caused by prolonged operation of the turret milling shaft.

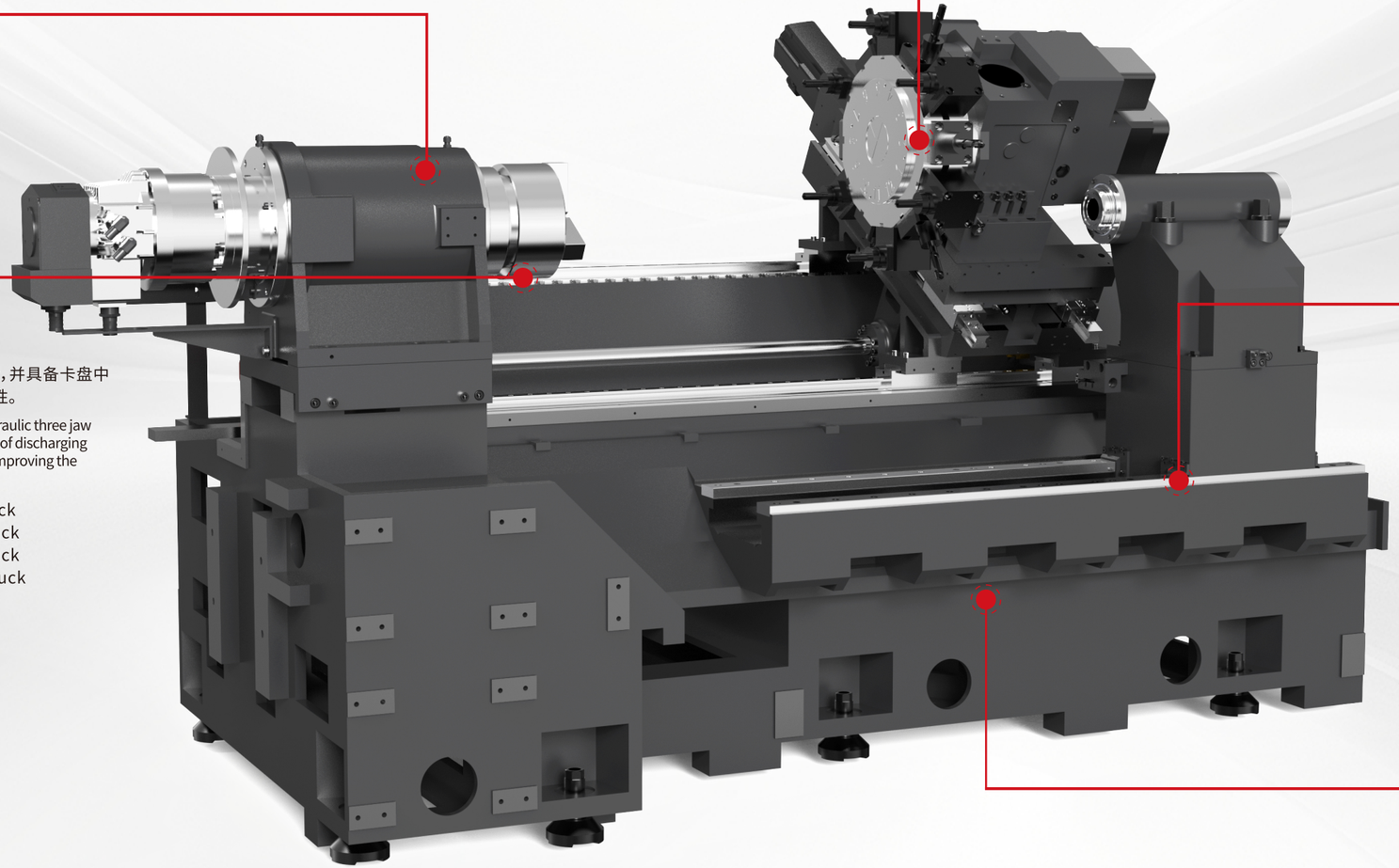

卡盘 CHUCK

卡盘选择6寸液压三爪中空卡盘，并具备卡盘中心出水功能，提高了操作的便利性。

The chuck is selected as a 6-inch hydraulic three jaw hollow chuck, which has the unction of discharging water from the center of the chuck, improving the convenience of operation.

L-25M ——6寸卡盘 6-inch chuck
L-35M ——8寸卡盘 8-inch chuck
L-45M ——8寸卡盘 8-inch chuck
L-45YP ——8寸卡盘 8-inch chuck

X/Y/Z丝杆导轨 X/Y/Z SCREW GUIDE RAIL

采用进口丝杆线规丝杆P4级精度导轨C3级精度。

Utilizes imported lead screw linear scales.Equipped with P4-grade precision lead screws and guide rails.Achieves C3-grade precision.

床身/滑鞍 BAR CONVEYORS

均采用高密度铸铁材料，整体浇筑一次成型，高低轨30度床身设计，使整个结构刚性更强，动态性能更加稳定。

The machine employs high-density cast iron material, cast in a single piece for seamless integrity. The 30-degree high-low rail bed design enhances overall structural rigidity and ensures superior dynamic stability.

机器外观尺寸图
Machine exterior dimensions diagram

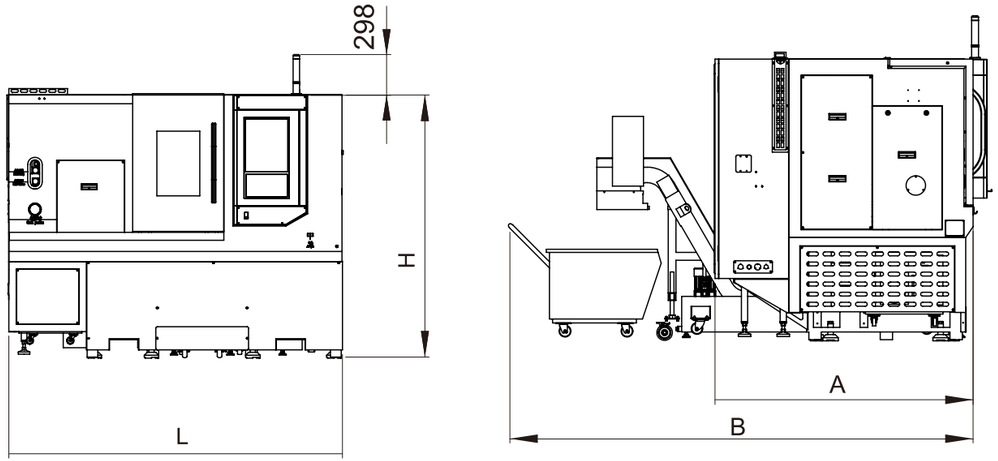

标准尺寸 Standard dimensions

设备型号Equipment model	L	H	A	B
HL-35M / HL-45M	2300	1800	1880	3000

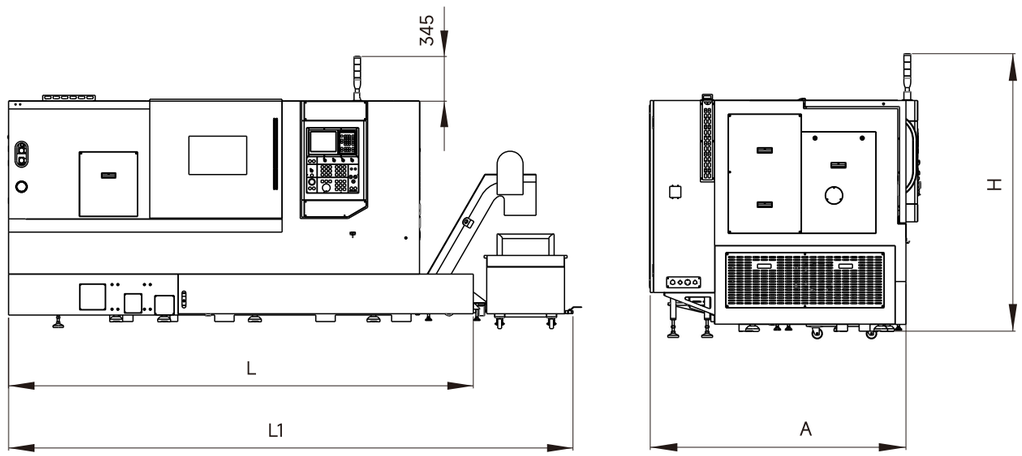

标准尺寸 Standard dimensions

设备型号Equipment model	L	L1	H	A
HL-45MP	3585	4500	2100	1880

加工能力图
Processing Capacity Chart

HL-35M

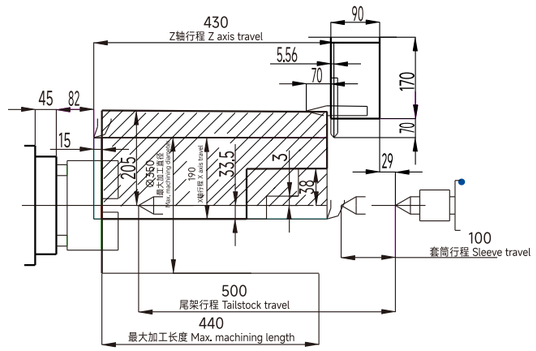

HL-45M

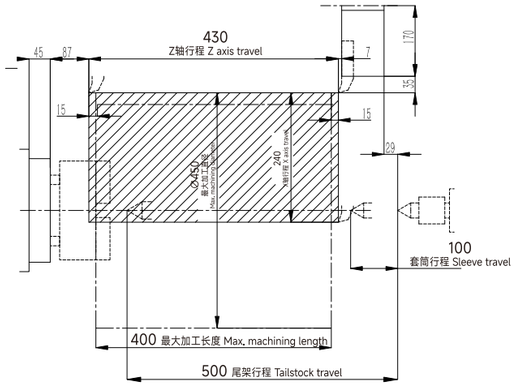

HL-45MP

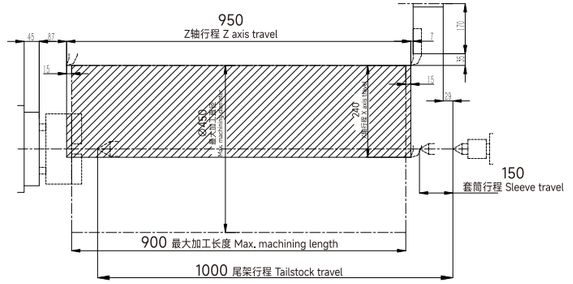

刀具干涉图
Tool interference diagram

HL-35M

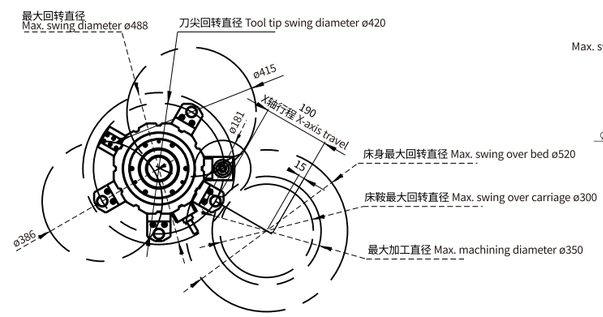

HL-45M / HL-45MP

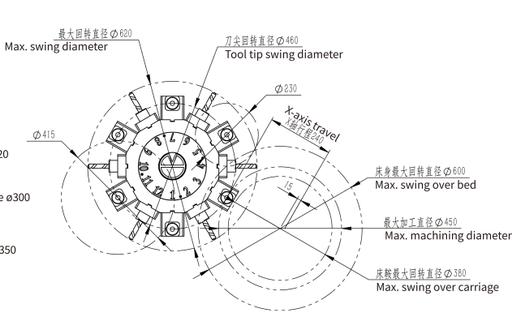

配置表 Configuration Table

项目 Item	HL-25M	HL-35M	HL-45M	HL-45MP
主轴头A2-5 Spindle head A2-5	√	★	★	★
主轴头A2-6 Spindle head A2-6	★	√	√	√
主轴头A2-8 Spindle head A2-8	×	★	★	★
三色灯 Tricolor light	√	√	√	√
液压系统 Hydraulic system	√	√	√	√
照明灯 Floodlight	√	√	√	√
冷却系统 Cooling system	√	√	√	√
安全门锁 Safety door lock	★	★	★	★
对刀仪 Tool Setter	★	★	★	★
接料装置 Material Feeding Device	★	★	★	★
自动润滑系统 Automatic Lubrication System	√	√	√	√
6寸中空卡盘油缸 6-inch hollow chuck oil cylinder	√	★	★	★
8寸中空卡盘油缸 8-inch hollow chuck oil cylinder	★	√	√	√
油雾收集器 Oil mist collector	★	★	★	★
油水分离器 water separator	★	★	★	★
动力刀塔 Power turret	√	√	√	√
送料机 feeder	★	★	★	★

√ 标准配置 ★ 可选配置 × 不可选　　√ Standard configuration ★ Optional configuration × Not available

加工案例 Processing Cases

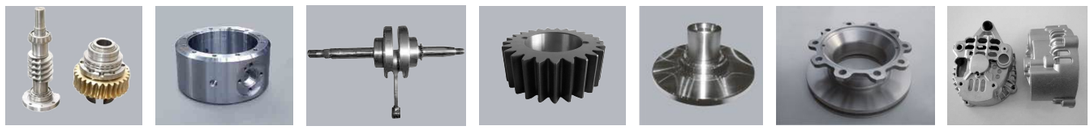

参数表 Parameter Table

项目 Item		HL-25M	HL-35M	HL-45M	HL-45MP
加工范围 Machining range	床身上最大回转直径(mm) Max. swing diameter on the bed (mm)	Ø520	Ø520	Ø600	Ø600
	最大加工直径(轴/盘)(mm) Max. machining diameter (shaft/disc) (mm)	Ø200/Ø250	Ø300/Ø350	Ø380/Ø450	Ø380/Ø450
	最大加工长度(mm) Max. machining length (mm)	190	400	400	240
	最大棒料直径(mm) Max. bar diameter (mm)	Ø45	Ø52	Ø75	Ø75
行程 Travel	X轴行程(mm) X-axis travel (mm)	190	190	240	240
	Y轴行程(mm) Y-axis travel (mm)	/	/	/	/
	Z轴行程(mm) Z-axis travel (mm)	420	430	430	950
主轴 Spindle	输出功率(kw) Output power (kW)	7.5/11	7.5/11	14.5/18.5	15/18.5
	主轴头形式 Spindle head form	A2-5	A2-6	A2-8	A2-8
	主轴最高转速(rpm) Max. spindle speed (rpm)	5300	4000	2800	2500
	主轴通孔直径(mm) Spindle through-hole diameter (mm)	Ø57	Ø63	Ø87	Ø103
刀架 Tool turret	刀塔形式及刀具容量 Turret type and tool capacity		Power BMT45/12	Power BMT55/12	Power BMT55/12
	外圆刀具尺寸(mm) External tool dimensions (mm)	/	25×25	25×25	25×25
	最大镗刀直径(mm) Max. boring tool diameter	Ø32	Ø32	Ø40	Ø32
快移速度 Rapid traverse speed	X/Z轴(mm/min) X/Zaxis(mm/min)	30000	30000	30000	30000
进给速度 Feed rate	进给速度(mm/min) Feed speed (mm/min)	1-8000	1-8000	1-8000	1-8000
尾架 Tailstock	尾架形式及锥孔形式 Tailstock type and taper hole type	Morse 4#	Hydraulic sleeve Morse 4#	Hydraulic sleeve Morse 4#	Hydraulic sleeve Morse 5#
	尾架套筒行程(mm) Tailstock sleeve travel (mm)	100	70/100	70/100	100/150
	最大移动量(mm) Max. travel distance (mm)	/	X/190 Z/430	X/240 Z/430	/
控制系统 Control system	NC形式 NC	FANUC 0I TF(5)	FANUC 0I TF(3B)	FANUC 0I TF(3B)	FANUC 0I TF(5)
排屑形式 Chip removal form		/	Automatic rear discharge	Automatic rear discharge	Automatic rear discharge

本画册内所有图片仅供参考，以实际交付为准；本公司产品不断改进，上述资料若有变更，恕不另行通知。
All images in this catalog are for reference only.Actual delivery may vary. Our company continuously improves its products, and in the event of any changes to the above information, no separate notice will be given.

车铣复合系列
TURN-MILL COMPOUND SERIES

优良的设计 EXCELLENT DESIGN

强大的性能 POWERFUL PERFORMANCE

系列机型 Series Models

HL-P30Y　HL-P46Y

高刚性整体设计 Highly rigid overall design

采用整体式套筒主轴，进口精密级主轴轴承，及主轴伺服电机驱动，以实现高精度、高刚性及转速稳定性。

Adopts an integrated sleeve spindle, imported precision-grade spindle bearings, and spindle servo motor drive to achieve high precision, high rigidity and stable rotational speed.

标准配置 Standard Features

FANUC 0i—TF PLUS(3B) 系统	FANUC 0i-TF PLUS (3B) Control System
全套 X/Y/Z发那科	Complete X/Y/Z FANUC axes
6寸中空筒夹中空油缸	6-inch hollow collet with hollow cylinder
Y轴动力头	Y-axis power head
8工位伺服刀架	8-station servo tool turret
冷却系统	Cooling system
自动润滑系统	Automatic lubrication system
液压系统	Hydraulic system

选项(部分列举) Options(partial)

电主轴A2-5	Motorized spindle A2-5
6寸中空卡盘	6-inch hollow chuck
自动排屑器+斗车	Automatic chip conveyor with hopper cart
伺服送料机	Servo bar feeder
接料装置	Material receiving device
80中心高刀架	Tool turret with 80 mm center height



性 能 Performance

床身上最大回转直径 Max. swing over bed φ500mm	
排刀上加工直径 Max. machining diameter on gang tool Φ160mm	
主轴端部形式 Spindle nose type A2-5	
中空筒夹 Hollow collet 6 inch	
主轴转速 Spindle speed 0-6000r/min	
输出功率 Output power (S1/S6) 7.5/11KW	
刀具容量 Tool capacity 8T	
3100机床净重 (约重) Net weight of machine (approx.) 3100KG	

机械结构
MECHANICAL STRUCTURE

L-P30Y/L-P46Y采用全封闭防护罩，拉门向左开，旋转操纵台位于右端固定防护罩上，操作方便。各伺服进给轴均采用高速静音滚珠丝杠，弹性联轴器直接连接，移动速度快、噪声低、定位精度和重复定位精度高。

L-P30Y/L-P46Y features a fully enclosed protective cover with a sliding door that opens to the left. The rotary control console is mounted on the fixed protective cover at the right end, ensuring convenient operation. All servo-driven feed axes utilize high-speed silent ball screws and are directly connected via flexible couplings. This design delivers rapid movement speed, low noise, as well as exceptional positioning accuracy and repeatability.

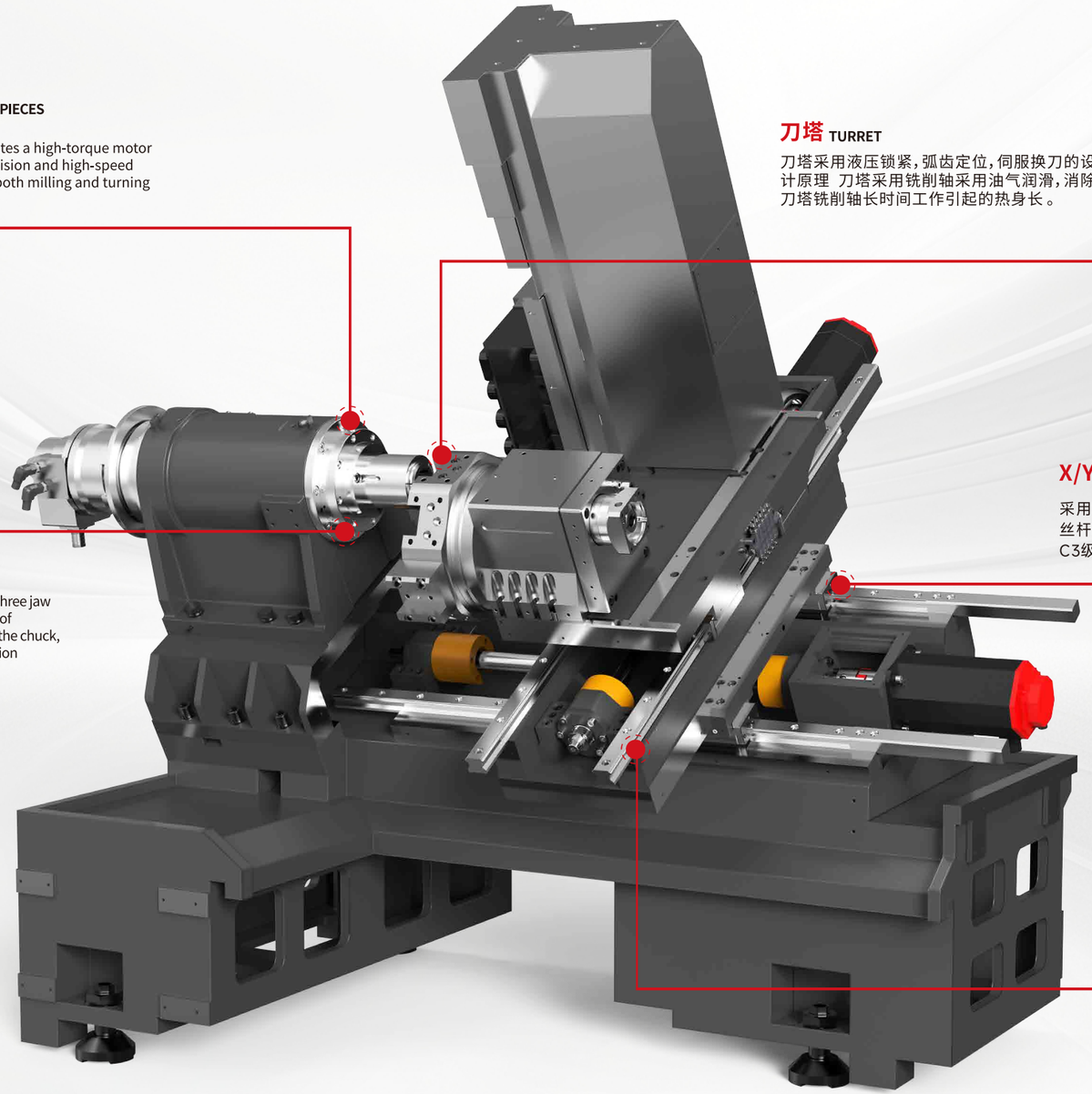

同步伺服电主轴 IN-LINE MEASURING DEVICE FOR WORKPIECES

采用高扭矩电机设计，在铣削与车削时保障精度。

The system incorporates a high-torque motor design, ensuring precision and high-speed performance during both milling and turning operations.

刀塔 TURRET

刀塔采用液压锁紧，弧齿定位，伺服换刀的设计原理 刀塔采用铣削轴采用油气润滑，消除刀塔铣削轴长时间工作引起的热身长 。

The turret adopts hydraulic locking, arc tooth positioning, and servo tool changing design principles The turret adopts oil and gas lubrication for the milling shaft, eliminating the long warm-up caused by prolonged operation of the turret milling shaft.

卡盘 CHUCK

卡盘选择液压三爪中空卡盘，并具备卡盘中心出水功能，提高了操作的便利性

The chuck is selected as a hydraulic three jaw hollow chuck, which has the unction of discharging water from the center of the chuck, improving the convenience of operation

X/Y/Z丝杆导轨 X/Y/Z SCREW GUIDE RAIL

采用进口丝杆线轨
丝杆P4级精度导轨
C3级精度

Utilizes imported lead screw linear scales.Equipped with P4-grade precision lead screws and guide rails.Achieves C3-grade precision.

床身/滑鞍 BAR CONVEYORS

均采用高密度铸铁材料，整体浇筑一次成型，高低轨30度床身设计，使整个结构刚性更强，动态性能更加稳定。

The machine employs high-density cast iron material, cast in a single piece for seamless integrity. The 30-degree high-low rail bed design enhances overall structural rigidity and ensures superior dynamic stability.

机器外观尺寸图
Machine exterior dimensions diagram

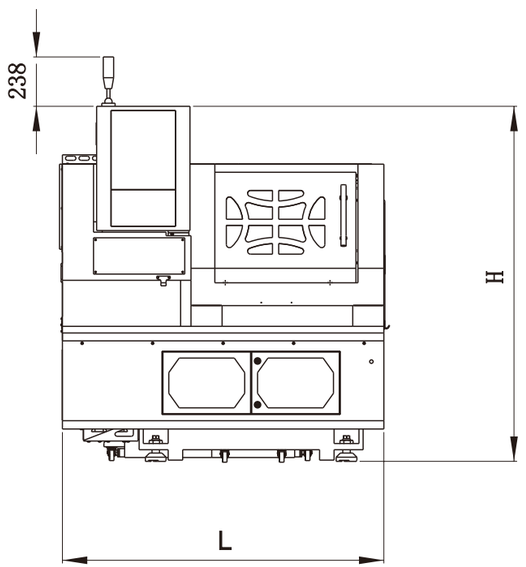

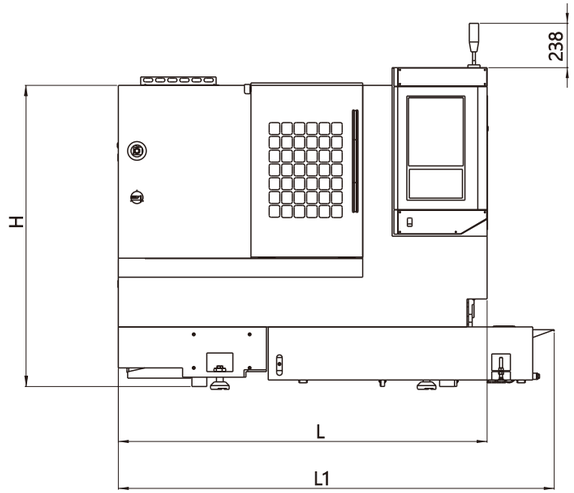

标准尺寸 Standard dimensions

设备型号 Equipment model	L	L1	L2	H	A	B
HL-P30Y	1550	1500	1950	1750	1350	1500
HL-P46Y	2040	2400	/	1560	2000	1880

刀具干涉图
Tool interference diagram

HL-P30Y

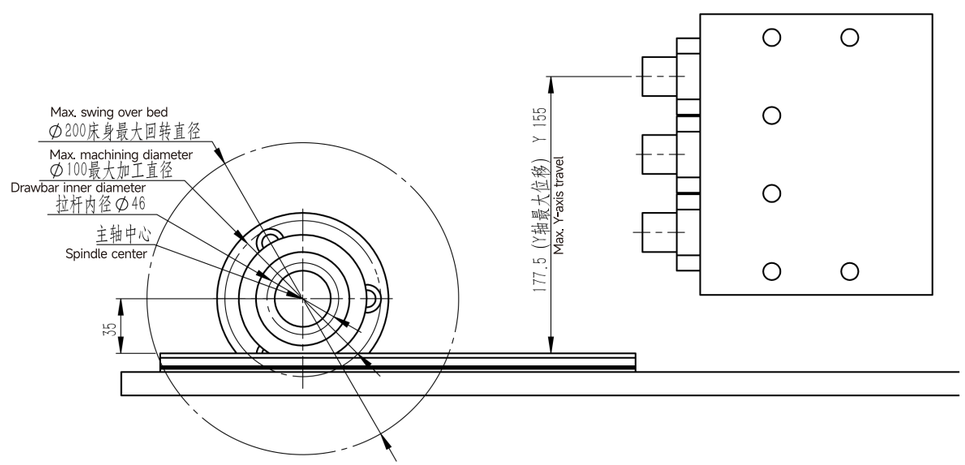

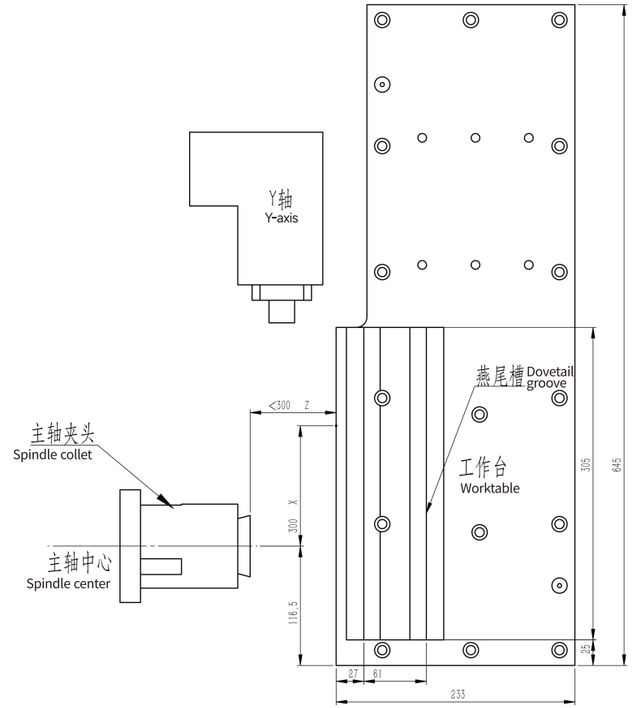

配置表 Configuration Table

项目 Item	HL-P30Y	HL-P46Y
主轴头A2-4 Spindle head A2-4	√	×
主轴头A2-5 Spindle head A2-5	×	√
4寸中空筒夹油缸 4-inch hollow chuck oil cylinder	×	×
5寸中空筒夹油缸 5-inch hollow chuck oil cylinder	√	×
6寸中空筒夹油缸 6-inch hollow chuck oil cylinder	×	√
8工位伺服刀塔 8-station servo turret	×	√
侧排屑(自动) Side chip removal (automatic)	×	★
侧排屑(手动) Side chip removal (manual)	√	√
后排屑(自动) Rear chip removal (automatic)	★	★
棒料机 Bar Feeder	★	★
自动接料装置 Automatic material receiving device	★	★
油雾收集器 Oil mist collector	★	★
高压出水 High pressure water outlet	★	★
自动门 Automatic Door	★	★
副主轴 Sub-spindle	×	★
光栅尺 Grating ruler	★	★
安全门光栅 Safety door light curtain	★	★

√ 标准配置 ★ 可选配置 × 不可选　　√ Standard configuration ★ Optional configuration × Not available

自动车床送料机 Automatic lathe feeding machine



车床送料机 Lathe feeder



机器手 Robot arm

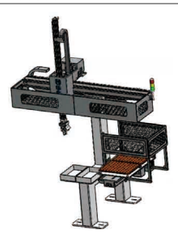

参数表 Parameter Table

项目 Item		HL-P30Y	HL-P46Y
加工范围 Machining range	床身上最大回转直径(mm) Max. swing diameter on the bed (mm)	Ø480	Ø500
	最大加工直径(轴/盘)(mm) Max. machining diameter (shaft/disc) (mm)	Ø160/Ø300	Ø300
	最大加工长度(mm) Max. machining length (mm)	270	350
	最大棒料直径(mm) Max. bar diameter (mm)	Ø30	Ø46
行程 Travel	X轴行程(mm) X-axis travel (mm)	270	450
	Y轴行程(mm) Y-axis travel (mm)	230	260
	Z轴行程(mm) Z-axis travel (mm)	270	400
主轴 Spindle	输出功率(kw) Output power (kW)	7.5/15	7.5/11
	主轴头形式 Spindle head form	A2-4	A2-5
	主轴通孔直径(mm) Spindle through-hole diameter (mm)	Ø36	Ø52
	主轴最高转速(rpm) Max. spindle speed (rpm)	6000	6000
刀架 Tool turret	刀塔形式 Turret type	Servo tool turret	Servo tool turret
	刀具容量 Tool capacity	/	8
	外圆刀具尺寸(mm) External tool dimensions (mm)	Ø16	/
	最大镗刀直径(mm) Max. boring tool diameter	Ø32	Ø32
快移速度 Rapid traverse speed	X/Z轴(mm/min) X/Zaxis(mm/min)	30/30	/
进给速度 Feed rate	进给速度(mm/min) Feed speed (mm/min)	1-8000	1-8000
控制系统 Control system	NC形式 NC	Syntec 22TB Control System	Syntec 22TB Control System
排屑形式 Chip removal form		Manual	Manual

本画册内所有图片仅供参考，以实际交付为准；本公司产品不断改进，上述资料若有变更，恕不另行通知。
All images in this catalog are for reference only.Actual delivery may vary. Our company continuously improves its products, and in the event of any changes to the above information, no separate notice will be given.

加工案例 Processing Cases



重型铸铁底座和部件
HEAVY-DUTY CAST-LRON BASE AND COMPONENTS

机床所有主要部件均采用减震能力极强的铸铁HT300。所有铸件采用有限元数分析法(FEA)进行优化，以降低扭曲形变、提离减震能力。各大系列车床的铸件配备加强筋强化加固，增强了刚性和热稳定性。紧凑、对称的主轴箱和尾座铸件使刚性得到进一步提升，确保高定位精度和重复定位精度。

All major components of the machine tool are made of HT300 cast iron with exceptional shock absorption performance. All castings are optimized using the Finite Element Analysis (FEA) method to reduce distortion and further enhance vibration damping.The castings of each lathe series are equipped with reinforcing ribs for structural reinforcement, improving rigidity and thermal stability. The compact and symmetrical headstock and tailstock castings further boost rigidity, ensuring high positioning accuracy and repeat positioning accuracy.

超强的刚性/极佳的热稳定性
Super rigidity / excellent thermal stability

新一代车削中心，超高的性价比体现
New-generation turning center with outstanding cost performance.

以模块化的设计理念为依托，实现车铣复合多功能一体。
Based on a modular design concept, it integrates turning and milling functions into one machine.

HL-35YP / HL-45YP

精度寿命更有保障阶梯式平行结构设计，具备高强度，高刚性，重切削，一体式斜床身30°配合斜式鞍座。
四滑块受力均匀，使行程更顺畅。

Higher precision and longer service life with stepped parallel structure design, featuring high strength, high rigidity, and heavy cutting capability. The integrated 30° slant bed is matched with an inclined saddle.
Even force distribution on four guide blocks ensures smoother travel.

四滑块受力均匀(减少导轨磨损)
Uniform loading on four guide blocks
(minimizing guideway wear).

减少导轨滑块滚珠磨损，可耐长期磨耗延长精度寿命更有保障。
This reduces ball wear in the guide blocks, enabling long-term durability and extending precision life.

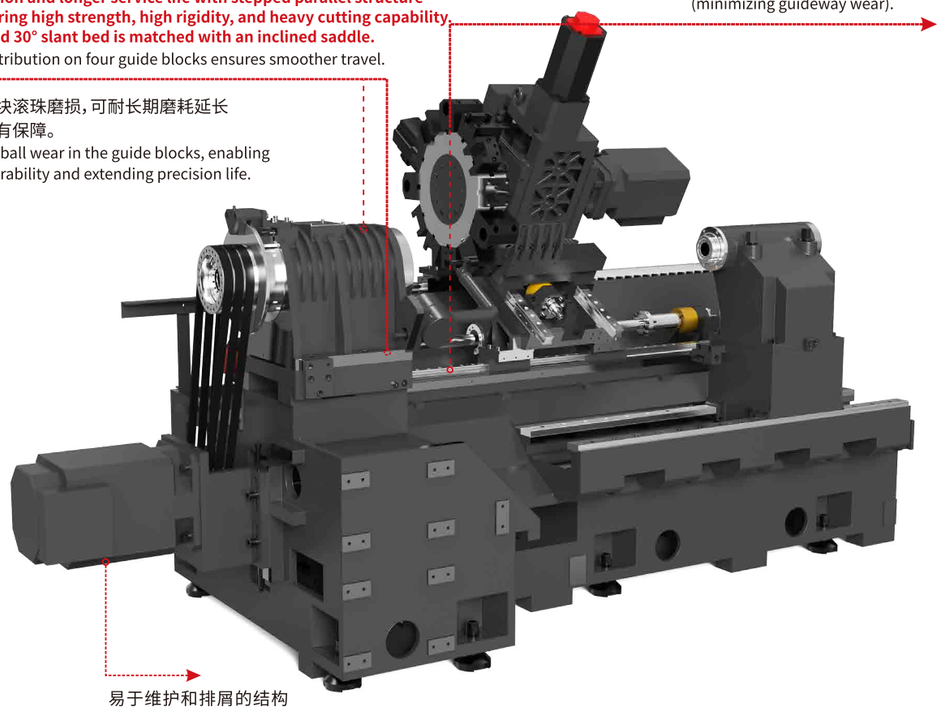

易于维护和排屑的结构
对机床防保罩进行全新的一体化设计
排屑方式可选择侧后方向排屑废渣分离
确保水箱内部干净无细渣残留结构的设计

User-friendly maintenance and chip removal structure with a newly designed integrated protective cover. Side or rear chip discharge is selectable for effective chip-coolant separation, keeping the coolant tank clean without fine chip residue.

HL-25Y / HL-35Y / HL-45Y 30°一体式床身结构特性
HL-25Y / HL-35Y / HL-45Y Characteristics of the 30 integrated bed structure

完美的刚性与稳定性 Perfect rigidity and stability

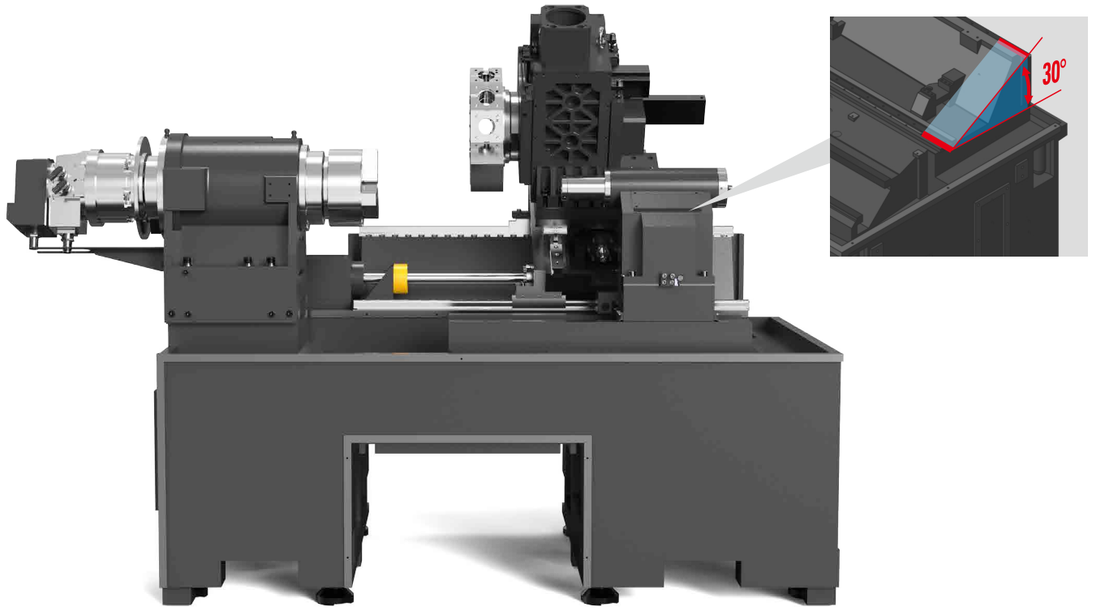

高刚性：
30°一体式高刚性斜床身设计，经过有限元分析，优化加强筋布局，使机床具有优良的刚性、低振动，同时实现最小占地面积。

高稳定性：
所有铸件均经过长时间的自然时效处理，并在精加工前进行二次振动时效处理，以消除铸件内部残余应力，确保精度持久稳定。

高承载性：
X/Z轴采用进口P级重载荷35mm滚柱导轨采用大跨距结构设计，可满足高负荷作业。

High rigidity:
The 30° integrated high-rigidity slant bed design, optimized with finite element analysis and reinforced rib layout, provides excellent rigidity, low vibration, and minimal footprint for the machine tool.

High stability:
All castings undergo long-term natural aging treatment and secondary vibration aging treatment before precision machining to eliminate residual internal stress in the castings, ensuring long-lasting stability of accuracy.

High load-bearing capacity:
The X/Z axis are equipped with imported P-grade heavy-duty 35mm roller guide ways with a large span structure design, capable of handling high-load operations.

高速高精度主轴单元
HIGH SPEED AND HIGH PRECISION SPINDLE UNIT

高刚性 高扭距 High Rigidity & High Torque
效率更高 Higher Efficiency
光洁度更好 Better Surface Finish
分度更精准 More Precise Indexing

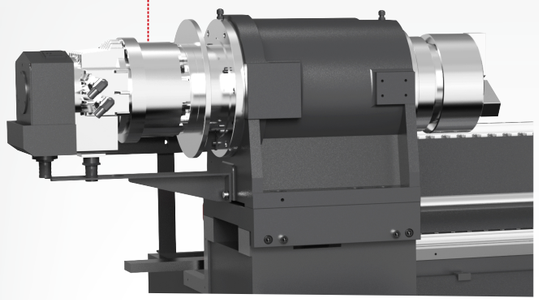

- 直驱同步电主轴 -
Direct-drive synchronous motorized spindle

搭配直驱电主轴机床特性 MACHINE FEATURES WITH DIRECT-DRIVE SPINDLE

- 启停回应速度快，节省机床进行时间，有效提升产能
- 切削负载较小、节能省电，更好保护机床延长使用寿命
- 有效消除主轴振动，平衡效果好，光洁度好，提高工件表面光洁度 **(以车代磨优势、硬车表观、表面粗糙度Ra0.2um)**
- 主轴电机搭配冷却系统，抑制热变位影响确保主轴持续恒温工作
- 后置式直驱同步主轴，安装维修更便捷
- A2-5:7016AC-前二后二
- A2-6:前NN3020+100BAR10S,后NN3018
- A2-8:前NN3024+BT022B*2,后NN3022

- Fast start-stop response, reducing machining time and effectively improving productivity.
- Low cutting load, energy saving and power efficient, better protecting the machine and extending service life.
- Effectively eliminates spindle vibration with excellent balancing performance, ensuring superior surface finish **(Advantages include turning instead of grinding, hard turning capability, and surface roughness Ra ≤ 0,2 μm)**.
- Spindle motor equipped with cooling system to suppress thermal displacement, ensuring stable spindle operation at constant temperature.
- Rear-mounted direct-drive synchronous spindle for easier installation and maintenance.
- A2-5: 7016AC, two front bearings + two rear bearings
- A2-6: Front NN3020 + 100BAR10S, rear Nn3018
- A2-8: Front NN3024 + 2×BT022B, rear Nn3022

双主轴背面加工 DUAL SPINDLE SERIES BACK PROCESSING

- 选用副主轴可提供高效率的背面加工能力，副主轴功率18/22kW,搭配接料装置可让完成的工件顺利脱离夹爪落入工件接收器内。

  Optional sub-spindle enables highly efficient back-side machining.The sub-spindle has a power rating of 18/22 kW and is equipped with a part catcher, allowing finished workpieces to smoothly exit the chuck and drop into the workpiece receiver.

- 副主轴在等转速同期控制下，从主轴精确地承接工件，再进行工件背面端的第二工程，不但可以节省人力，而且降低工件的二次定位设定时间与精度误差及工件损耗。

  Under synchronous control at the same rotational speed, the sub-spindle accurately receives workpieces from the main spindle and performs secondary operations on the workpiece's back end.This not only saves labor but also reduces secondary positioning setup time, accuracy errors, and workpiece scrap.

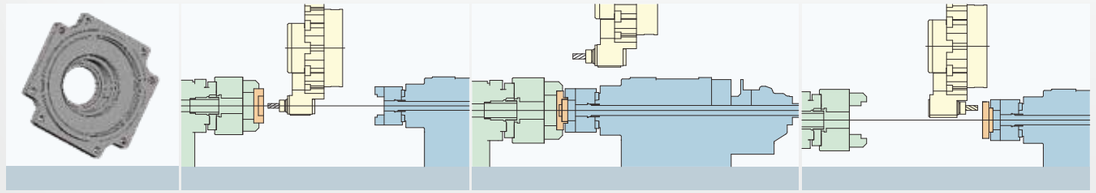

- Φ52副主轴配置可提供长工件加工能力，工件两端可由主轴及副主轴同时夹特支撑来进行工件中段精密加工，细长工件可直接由副主轴通孔送出。

  The Φ52 sub-spindle configuration supports long workpiece machining:both ends of the workpiece can be clamped and supported simultaneously by the main and sub-spindles for precision machining of the middle section.Slender workpieces can be fed directly through the sub-spindle bore.

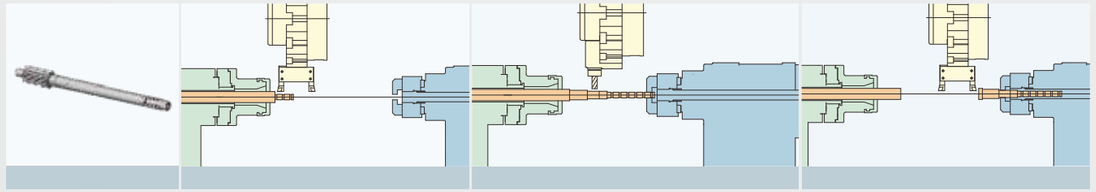

液压套筒式尾架
HYDRAULIC SLEEVE-TYPE TAILSTOCK

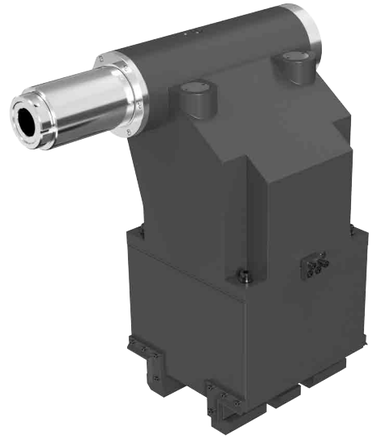

★ 大跨距硬轨结构设计，高刚、性强，承载能力强。
★ 燕尾式结构，下压板锁紧时更加可靠。
★ 套筒行程长，液压顶紧工件，顶紧力可调，满足不同种类产品的加工需求。

★ Large-span hardened rail structure design, high rigidity and strong load-bearing capacity.
★ Dovetail structure for more reliable locking when the pressure plate is tightened.
★ Long sleeve stroke, hydraulic clamping of workpieces with adjustable clamping force, meeting the processing needs of different types of products.

精密丝杠/导轨
PRECISION BALL SCREW/GUIDE RAIL



X/Z轴采用进口（C3级）大直径高速静音滚珠丝杠，
合理的预拉伸量有效防止温升变形；快速进给可达30m/min;
X/Z轴采用35mm进口滚柱重负荷型导轨，刚性好，抑制振动，提高刀具寿命，精度高，响应速度快，使用寿命长，可以满足客户长期的使用需求。

The X/Z axis are equipped with imported (C3 grade) large-diameter high-speed and low-noise ball screws. The reasonable preloading effectively prevents thermal deformation. The rapid feed can reach 30m/min.
The X/Z axis adopt 35mm imported heavy-duty cylindrical roller guide rails, providing excellent rigidity, vibration suppression, extended tool life, high precision, fast response, and long service life. These features meet the long-term usage requirements of customers.

独特的刀塔设计性能
SPECIAL TURREI DESIGN FEATURES

一体式正Y轴结构属于高刚性、重切削性能优于插补Y轴。
The integrated true Y-axis structure features high rigidity and heavy cutting performance, superior to the interpolated Y-axis.

- 平面轮廓加工更顺畅、平整。
  Smoother and flatter machining of planar contours.
- 更便于复合型曲面、轮廓加工“正Y”与“插补Y”相比在加工平面铣上面有明显的优势“正Y”Y轴运动方式垂直于X轴，属于单轴运动，“插补Y”Y轴运动是通过X轴和Y同时运动插补出一条直线，铣削加工平面的平整度和“正Y”比较，“正Y”轴加工明显光亮平整。

  It is more suitable for machining complex surfaces and profiles.Compared with the interpolated Y-axis, the true Y-axis has obvious advantages in flat milling.The true Y-axis moves perpendicularly to the X-axis as a single-axis motion.The interpolated Y-axis produces a straight line through simultaneous interpolation of X and Z axes.In terms of flatness, the surface machined by the true Y-axis is significantly smoother and brighter than that by the interpolated Y-axis.

自主研发100mm Self-developed 100 mm

BMT45偏离中心线90±45	BMT45: Offset from center line 90±45
BMT55偏离中心线100±50	BMT55: Offset from center line 100±50
BMT65偏离中心线120±60	BMT65: Offset from center line 120±60

动力刀座 Live tool holders

独领者之优质精工 The Leader's premium craftsmanship


外径刀座
OD tool holders


端面刀座
Face tool holders


镗孔刀座
Boring tool holders


90°动力刀座
90° live tool holders


万向动力刀座
Universal live tool holders


0°动力刀座
0° live tool holders

高刚性高精度的刀塔系统
High-Rigidity, High-Precision Turret System

3大无与伦比的创新给您带来巨大的效率提升
Three unparalleled innovations bring you massive efficiency gains.

70Kg 耐压，BMT 刀座 + 正 Y 强刚性
Withstands 70Kg pressure, featuring BMT tool holders + true Y-axis for superior rigidity.

可以承受70Kg高压水力/动力刀座采用BMT接口
Capable of handling 70Kg high-pressure hydraulic / powered tools with BMT interface.

一体式正Y轴、龙门结构，超强刚性
Integrated true Y-axis and gantry structure deliver exceptional rigidity.

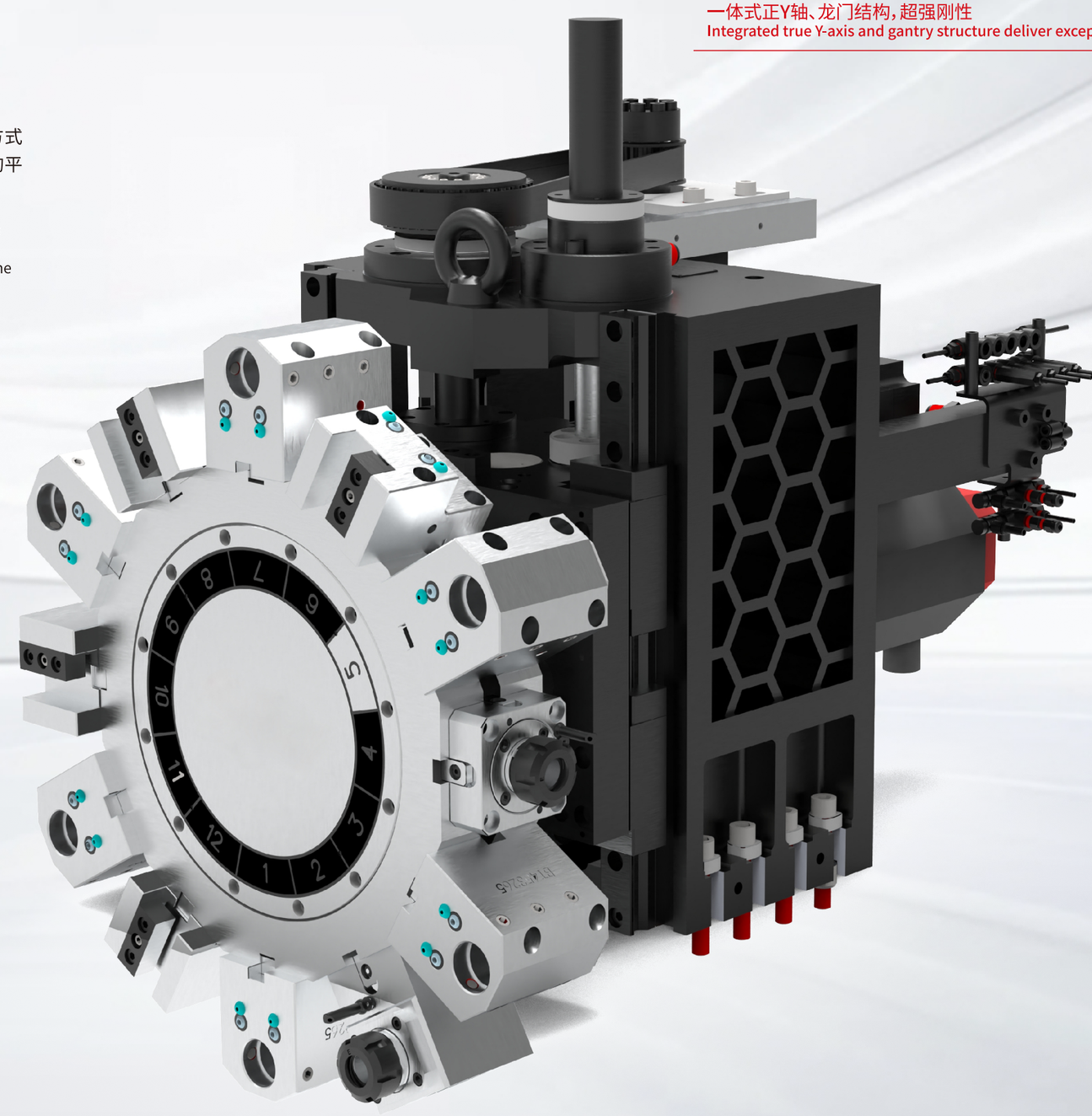

刀塔型号说明：BMT55-V12T-330 / BMT45-V12T-290

Model Description of the Turret: BMT55-V12T-330/ BMT45-V12T-290

- **BMT55/45**
  动力刀塔安装规格
  Power turret installation specifications
- **V12T**
  工作刀数
  Number of working stations
- **330/290**
  刀盘直径
  Turret disk diameter

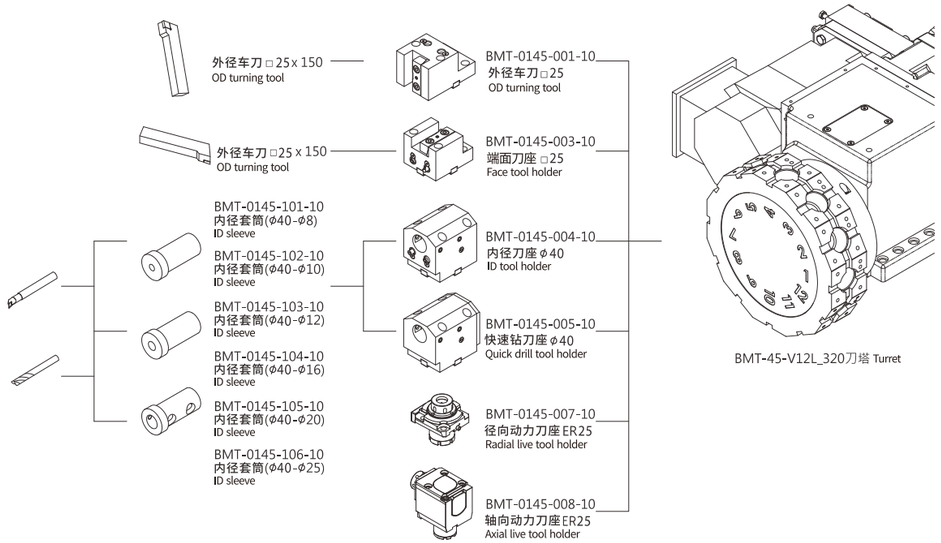

BMT-45-V12L_320刀塔 Turret

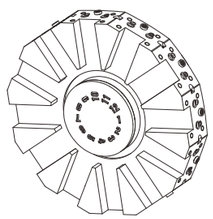

NC-100-V12 配刀图

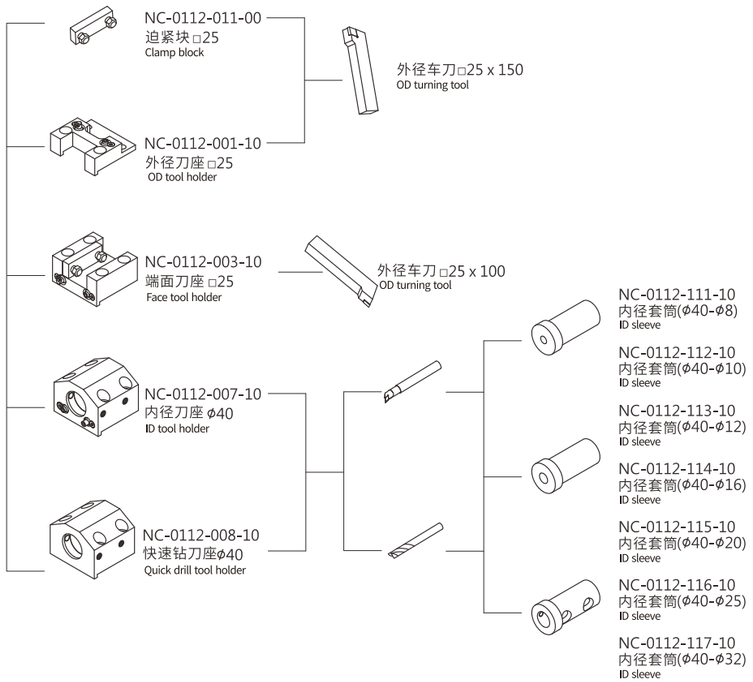

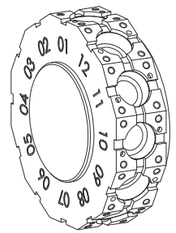

BMT-55/65-V12 配刀图 Tool Layout Diagram

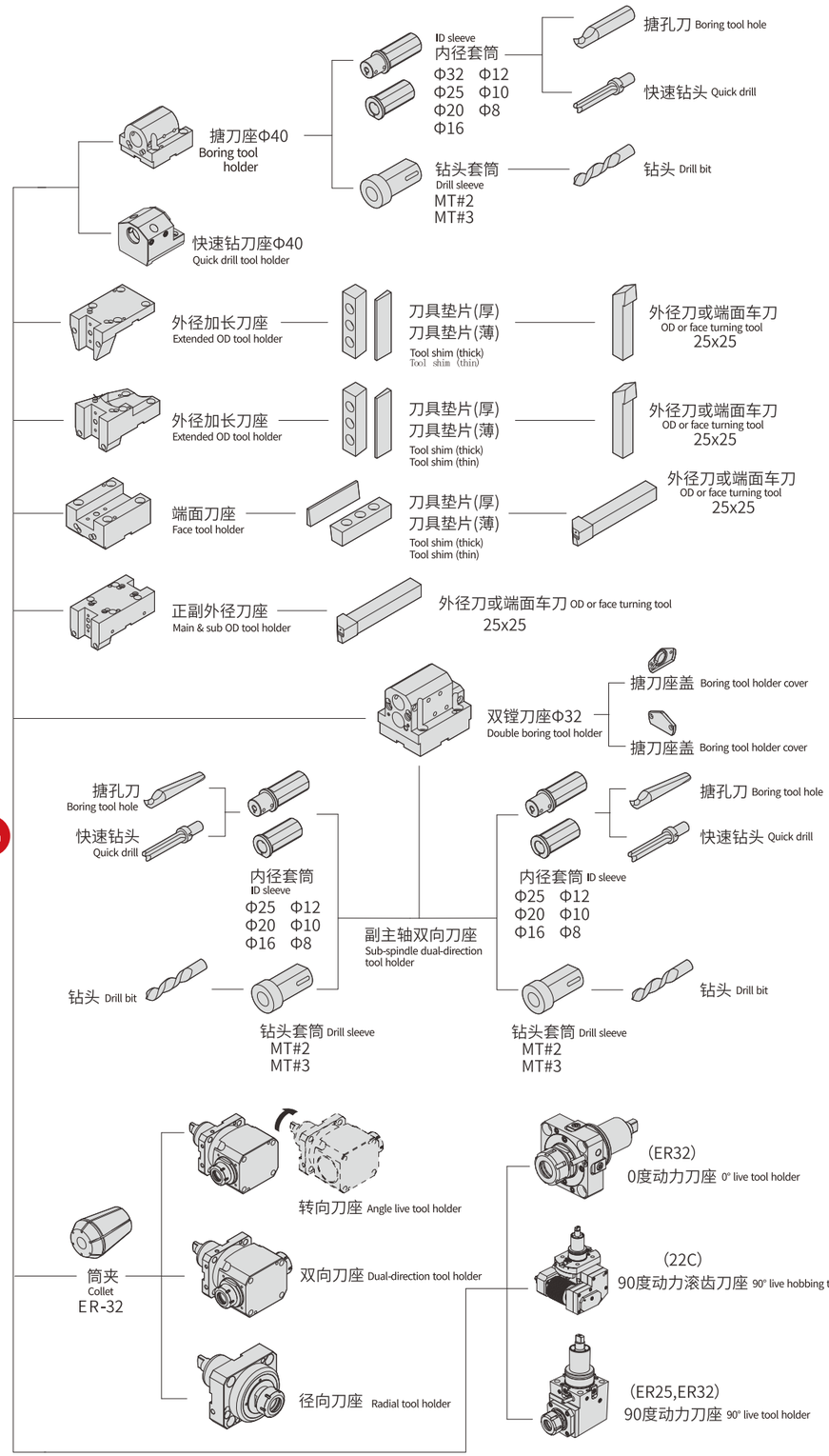

前沿设计工具让理想变为可能
CUTTING-EDGE DESIGN TOOL MAKE IT POSSIBLE

● 不断进步和成熟的生产解决方案，数十年技术积累体现在众多设计细节中。

Progressively improved and mature production solutions, with decades of technical expertise reflected in numerous design details.

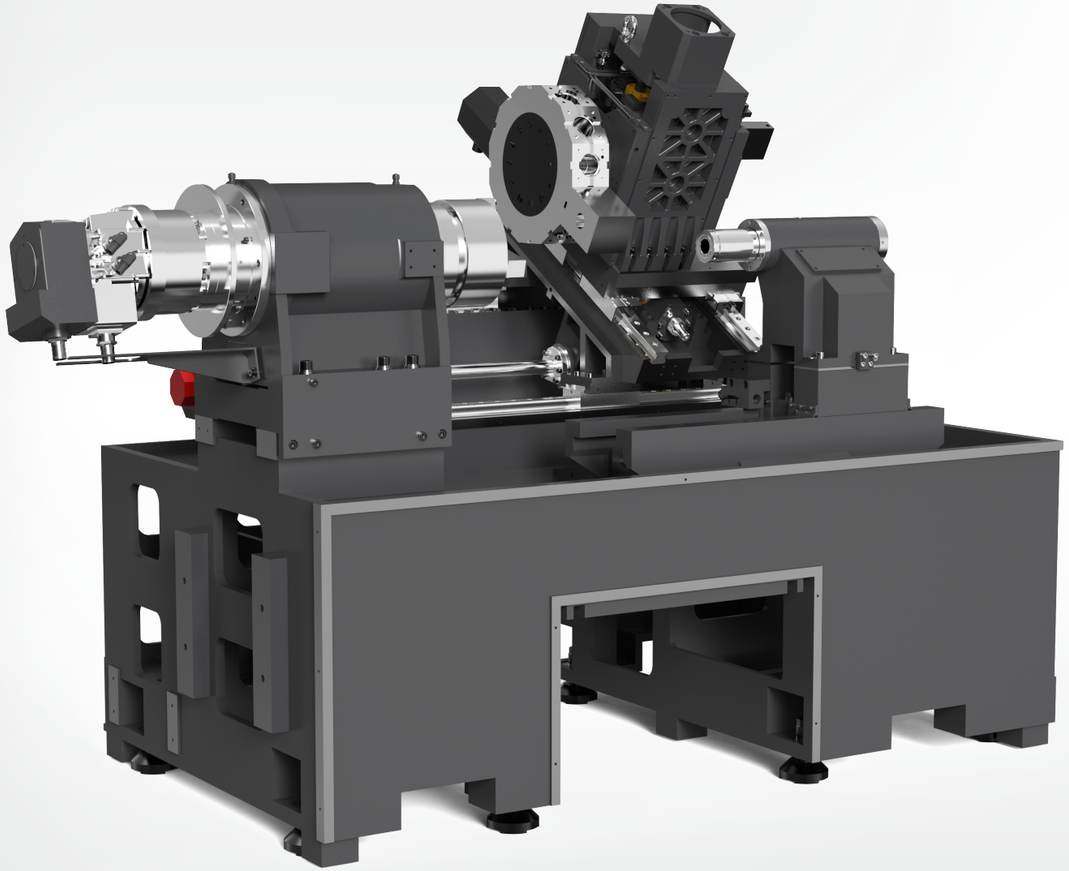

基本组件 Servo turret parameters

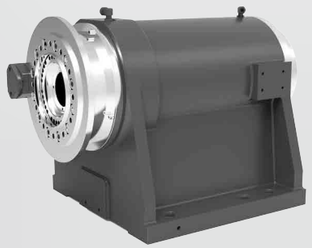

直驱同步电主轴

采用液体冷却，具备最优热稳定性。
内置的电机主轴没有会引起振动的齿轮或皮带,可以获得良好的表面加工。

A2-6	孔径中79/Φ66	4300rpm	8/10寸卡盘
A2-8	孔径中86	2200rpm	10/12寸卡盘

Direct-drive synchronous motorized spindle

Liquid cooling is adopted for optimal thermal stability. The built-in motor spindle has no gears or belts that cause vibration, ensuring excellent machined surface quality.

A2-6 Bore diameter 79/Φ66	4300rpm	8/10-inch chuck
A2-8 Bore diameter 86	2200rpm	10/12-inch chuck



副主轴直驱式电主轴

副主轴A2-6, 轴通孔直径66/52mm
最大转速4300转
轴功率18/22kW
扭距91/227

Sub-spindle direct-drive motorized spindles

Sub-spindle A2-6, shaft bore diameter 66/52mm
Maximum speed 4300rpm
Shaft power 18/22kW
Torque 91/227



MY动力刀塔BMT55/65

Y轴行程：BMT55(100±50)　　BMT65(120±60)
旋转刀具最大转速：6000r/min　　相邻换刀时间：0.15S
旋转刀具最大输出功率：5.5KW/7.5KW　　12个动力刀位
旋转刀具最大扭矩：35N-m/47.8N-m　　三片齿弧齿结构
高刚、高精、高效的加工性能

MY Power Turret BMT55/65

Y-axis travel: BMT55(100±50)　　BMT65(120±60)
Maximum rotary tool speed: 6000r/min　　Adjacent tool change time: 0.15S
Maximum output power of rotary tool: 5.5KW/7.5KW　　12 power tool positions
Maximum torque of rotary tool: 35N-m/47.8N-m　　Three-piece tooth arc tooth structure
High-steel, high-precision, high-efficiency machining performance

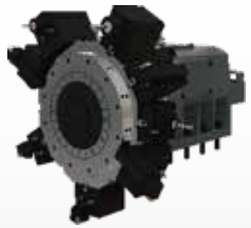

M动力刀塔BMT55/65

•12个动力刀位，可实现同一机床完成车、铣、钻和攻丝等加工，避免不同工序因更换机床引起的误差和效率低下的问题。
•全面采用三片齿弧齿结构，锁紧面积大，定位精度高。
•高精度的分度精度，提高刀座互换精度，相邻换刀时间仅需0.15S。
•中心出水结构，可实现高压断屑，最大可接10Mpa高压切削液。

M Power Turret BMT55/65

-12 power tool positions, can realize the same machine tool to complete turning, milling, drilling and tapping processing, avoiding the error and inefficiency caused by changing machine tools in different processes.
-Avoiding the error and inefficiency caused by changing machines in different processes. Comprehensively adopts three-piece teeth arc tooth structure, large locking area and high positioning accuracy.
-High-precision indexing accuracy, improve the precision of tool holder interchangeability, and the adjacent tool change time is only 0.15S.
-Center water outlet structure, which can realize high-pressure chip breakage, and can receive up to 10Mpa high-pressure cutting fluid.



NC伺服刀塔

•三片齿弧形结构齿盘，保证了任何切削情形下的刀塔刚性。
•中心出水结构，可实现高压断屑，最高可接10Mpa的高压切削液。
•减速箱直接式传动结构，紧凑稳定。

NC servo turret

-Three-piece tooth curved structure tooth disk ensures the rigidity of the turret in any cutting situation.
-Center water outlet structure can realize high-pressure chip breakage, and it canreceive high-pressure cutting fluid up to 10Mpa.
-Reducer direct drive structure, compact and stable.



液压尾座内置式尾座

•选择手动模式，尾座心轴可寸移前移，顶针方便且精确的顶住工件中心。
•选择自动模式，尾座本体与心轴的移动由M码控制，而心轴的推力大小可由手动调整。
• Z轴鞍座自动与尾座本体连结，并将其带动至所需位置。

Hydraulic tailstock built-in tailstock

-Select manual mode, the tailstock mandrel can be moved forward by inches, and the ejector pin can easily and accurately hold the center of the workpiece.
-Selecting automatic mode, the movement of the tailstock body and mandrel is controlled by M-code,and the amount of thrust on the mandrel can be adjusted manually.
-The Z-axis saddle automatically connects to the tailstock body and drives it to the desired position.

可选配件
OPTIONAL ACCESSORIES

光栅尺 Optical scale

- 光栅尺是一种封闭式线性条带编码器，可以实现高精度的光栅尺度测量和编码，适用于各种机械自动化和控制产品。
- 光栅尺具有高分辨率、高速度、高录敏度等特点，是CNC系统和各种电机的优质配件。

- Light Shed Scale is an enclosed linear strip encoder that enables high precision grating scale measurement and encoding for a wide range of machine automation and control products.
- With high resolution, high speed and high recording sensitivity, light shed scale is a quality accessory for CNC systems and various motors.

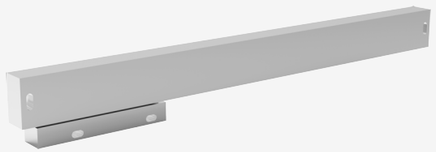

顶料装置 Ejector device

- 在副主轴进行第二道工序加工时，实现副主轴收料的稳定性。
- 副主轴内置顶料装置，工件完成加工能顺利脱离夹爪落入工件接料装置。

- Stabilization of the subspindle to receive the workpiece when the subspindle carries out the second process.
- The sub-spindle is equipped with a built-in ejector, so that the workpiece can be smoothly removed from the clamping jaws and dropped into the workpiece receiving device after machining.



雷尼绍工件测量 Renishaw Workpiece Measurement

- m&h1RP40.02红外测头系统满足机床测量的所有要求。
- 极端加速、高定位速度、持续振动、艰难的换刀、温度升高和侵蚀性冷却剂对m&h触摸式测头没有任何问题。
- m&h的精密机械装置可以持续进行极其精确的切换，并且没有磨损。
- 探头的设计极为紧凑和坚固，它在机器上只需要很小的空间。

- The m&h 1RP40.02 infrared probe system meets all the requirements of machine tool probing.
- Extreme accelerations, high positioning speeds, constant vibrations, difficult tool changes, elevated temperatures and aggressive coolants are no problem for m&h touch probes.
- The precision mechanics of the m&h touch probes allow for extremely precise changeovers on a continuous basis without wear.
- The design of the probe is extremely compact and robust, and it requires very little space on the machine.

雷尼绍 RENISHAW apply innovation™

雷尼绍对刀仪 Renishaw Optical scale

- 具有高精度重复的下拉式对刀仪，有多种不同的尺寸，满足各种工业需求。
- 采用低膨胀系数的钢测量臂。
- 使用坚固的氧化锆测头。
- 闲置时占用很小的机床空间。

- Has a high precision repeatable drop down tool setting gauge that is available in a variety of different sizes to meet a wide range of industrial needs.
- Uses a low coefficient of expansion steel measuring arm.
- Uses a robust zirconia probe.
- Takes up very little machine space when idle.



刀座中心出水 Tool Holder Center Outlet

- 工件和刀具精准冲洗、冷却、润滑、断屑和排屑。
- 延长刀具的使用寿命，提高批量零部件的加工精度和表面质量。

- Precise flushing, cooling, lubrication, chip breaking and chip removal of workpieces and tools.
- Extends tool life and improves machining accuracy and surface quality of batch parts.

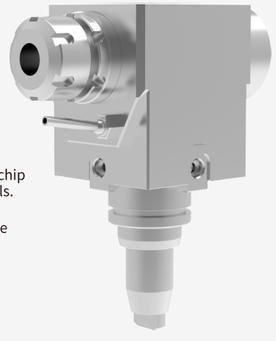

自动送料机（选购） Automatic feeder (optional)

- **安装简单、易于操作**
- 送料机采用了重负载、自动化设计，显著提升生产效率并简化加工。

- Simple installation and easy operation
- The feeder features a heavy-duty, automated design that significantly increases productivity and simplifies processing.



接料器（选购） Splicer (optional)

- 加工结束后的工件会被自动传输至机器外部的零件箱中。
- 通过将棒料机和工件下料器输送机结合使用，可以实现自动化。
- 通过加装输送带可将接料器接出来的加工完成件自动移动到工件料仓，提高作业效率。

- The finished workpieces are automatically transferred to a parts bin outside the machine.
- Automation can be realized by combining the bar feeder with the workpiece unloader conveyor.
- By adding a conveyor belt the finished machined parts picked up by the receiver can be automatically moved to the workpiece bin to improve operational efficiency.



夹治具设计 Fixture Design

- 满足客户在不同实际应用场景下对车削和车铣的高精度要求。
- 提供特殊产品夹治具设计服务，高精密产品装夹解决方案、异形件装夹解决主案、薄壁件加工夹持解决方案等。

- Satisfy customers' high precision requirements for turning and milling in different practical application scenarios.
- Provide special product fixture design services, high precision product clamping solutions, shaped parts clamping solutions, thin-walled parts processing clamping solutions, etc..

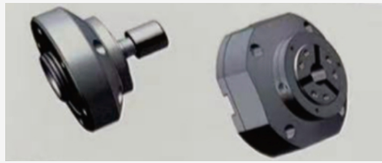

油雾收集器 Oil Mist Collector

- 离心叶轮转动产生负压轴吸污染的空气。
- 空气经轴离心涡轮叶片高速旋转产生的径向离心力，让油雾微粒或更细小的油雾微粒再凝聚成小液滴，甩至设备内壁上。
- 空气通过内置的专用滤芯再次净化，由特殊设计的回油管排出。

- Centrifugal impeller rotation produces negative pressure shaft suction contaminated air.
- Air through the shaft centrifugal turbine blades rotate at high speed to produce radial centrifugal force, so that the oil mist particles or finer oil mist particles and then coalesce into small droplets, thrown to the inner wall of the equipment.
- The air is purified again by the built-in special filter element and discharged by the specially



高压泵 High-Pressure Pump

30/50/70KG
高压断屑冷却技术

- 排除金属加工缠绕烦恼，降低加工时产生的局部高温。
- 延长刀具使用寿命，降低刀具磨损、零件生产报废率，为企业节省成本、提高生产效率与加工质量。

30/50/70KG
High-pressure chip-breaking cooling technology

- Excluding metal processing winding troubles, reducing the local high temperature generated during processing.
- Extend the service life of cutting tools, reduce the wear of cutting tools and scrap rate of parts production, save the cost and improve the production efficiency and machining quality for the enterprise.cost, improve production efficiency and processing quality.



标准配件
Standard Accessories

THK/PMI滚珠丝杆 THK /PMI Ball Screws

- C3级，采用高精密滚珠螺杆，配合螺帽预压及螺杆预拉处理预先消除背隙及温升伸长，展现优异的定位及重复精度。伺服马达直接传动，降低背隙误差。

- C3 grade, adopting high precision ball screw, with nut pre-pressing and screw pre-drawing treatment to eliminate backlash and temperature rise elongation in advance. Backlash and temperature rise elongation are eliminated in advance, showing excellent positioning and repeatability.-Direct drive by servo motor reduces



THK/PMI滚柱线性导轨 THK/PMI Roller Linear Guideway

- P级超高刚性SRG精密级，线性导轨零间隙，圆弧切削，斜面切削，表面纹路较均匀。适用高速运转，大幅降低机床所需驱动马力。
- 以滚动代替滑动，磨擦损失小，反应灵敏，定位精度高。可同时承受移动方向的负荷，在负荷中轨道接触面仍以多点接触，切削刚性不会降低。
- 组装容易、具互换性强，且润滑构造简单；磨耗量非常微小，使用寿命长。

- P grade ultra-high rigidity SRG precision grade, linear guide zero clearance, arc cutting, bevel cutting, surface texture is moreUniform surface texture. Applicable to high
- Speed operation, significantly reducing the required drive horsepower of the machine tool.
  Rolling instead of sliding, small friction loss, sensitive response, high positioning accuracy. It can bear the load of moving direction at the same time.The contact surfaces of the rail are still in multi-point contact during the load, and the cutting rigidity will not be reduced.
- -Easy assembly, strong interchangeability, and simple lubrication structure; very small wear, long service life.



SKF轴承/注油机 SKF Bearing/Lubricator

- 自动润滑器满足多种应用所需，适用各种工况，产品可靠，使用灵活。
- 满足高温、强振动和危险环境轴承润滑的需要。
- 各润滑点以容积式比例分配器控制润滑量，可利用PLC控制机台精确供油。

- Automatic lubricators meet the needs of a variety of applications, suitable for a variety of working conditions, the product is reliable and flexible in use.
- Meet the needs of high temperature, strong vibration and dangerous environment bearing lubrication.
- Each lubrication point is controlled by a volumetric proportional distributor to control the lubrication volume, and the machine can be precisely supplied with oil by PLC control.

